Extraflame®

Riscaldamento a Pellet

QR LABEL

UK

PELLET STOVES USER MANUAL

ISIDORA IDRO H16-H20-H23 5.0 EVO

MADE IN ITALY
design & production

004331792 - REV 000

ATTENTION

SURFACES CAN BECOME VERY HOT!
ALWAYS USE PROTECTIVE GLOVES!

During combustion, thermal energy is released that significantly increases the heat of surfaces, doors, handles, controls, glass, exhaust pipes, and even the front of the appliance. Avoid contact with those elements if not wearing protective clothing (protective gloves included). Make sure children are aware of the danger and keep them away from the stove during operation.

ENGLISH **6**

WARNINGS **6**
SAFETY **6**
ROUTINE MAINTENANCE **8**
INSTALLATION **9**
HYDRAULIC SYSTEM **12**
INSTALLATION AND SAFETY DEVICES 12
ANTI-CONDENSATION DEVICE (MANDATORY) **13**
DETAILS ISIDORA H16-H20-H23 5.0.EVO **14**
FEATURES **15**
CHECKS AND MEASURES FOR COMMISSIONING **15**
BULB THERMOSTATS - RESET 15
STOVE POSITIONING **16**
NOTE FOR CORRECT OPERATION **16**
RESETTING 16
FUSE 16
PELLETS AND LOADING **17**
PELLET HOPPER **17**
REMOTE CONTROL (OPTIONAL) **18**
REMOTE CONTROL ICONS 19
INSERTING THE BATTERIES 19
ADVICE AND PRECAUTIONS FOR THE USE OF THE REMOTE CONTROL 19
CONTROL PANEL AND DISPLAY ICONS **20**
ICON KEY 20
KEY FUNCTIONS 21
MENU STRUCTURE 21
GENERAL WARNINGS 22
FIRST IGNITION SETTINGS **22**
DATE-TIME **22**
LANGUAGE **22**
DEGREES **22**
OPERATION AND LOGIC **23**
STAND-BY - ADDITIONAL THERMOSTAT **24**
ADDITIONAL THERMOSTAT FUNCTIONING WITH **STAND BY** ACTIVE 24
ADDITIONAL THERMOSTAT OPERATION WITH **STAND BY** DEACTIVATED 24
ADDITIONAL THERMOSTAT INSTALLATION 24
VENTILATION **25**
EASY SETUP **25**
CHRONO **26**
ENABLE CHRONO 26
WEEKLY PROGRAM SETTING 26
SETTINGS **28**
DISPLAY **28**
STAND BY **28**
FIRST LOAD **28**
OUTLET AIR **28**
CLEANING **29**
WI-FI **29**
OPERATION AND SOLUTIONS 30
RESET **30**
EASY CONTROL 30
AUX **31**
OPTIONAL ADDITIONAL DATA SHEET **31**
CLEANING AND MAINTENANCE **32**
MAINTENANCE **32**
PERIODIC CLEANING UNDER USER'S RESPONSIBILITY 32
ROUTINE MAINTENANCE PERFORMED BY QUALIFIED TECHNICIANS **35**
SHUT-DOWN (END OF SEASON) 35
DISPLAYS **37**
ALARMS **38**
ALARMS **38**
DISPOSAL **40**

IT - ATTENZIONE TASSATIVO PRIMA DI MOVIMENTARE LA STUFA TOGLIERE IL RIVESTIMENTO INDICATO PER EVITARE DANNI.	**EN - WARNING BEFORE HANDLING THE STOVE, THE COVERING INDICATED MUST BE REMOVED TO AVOID DAMAGE.**
FR - ATTENTION IMPÉRATIF AVANT DE DÉPLACER LE POÊLE, RETIRER LE REVÊTEMENT INDIQUÉ POUR ÉVITER TOUT DOMMAGE.	**DE - ACHTUNG PFLICHT BEVOR DER OFEN BEWEGT WIRD, MUSS DIE ANGEZEIGTE VERKLEIDUNG ENTFERNT WERDEN, UM SCHÄDEN ZU VERMEIDEN.**
ES - ATENCIÓN TAXATIVO ANTES DE MANEJAR LA ESTUFA QUITE EL REVESTIMIENTO INDICADO PARA EVITAR DAÑOS.	**PT - ATENÇÃO OBRIGATÓRIO ANTES DE MOVIMENTAR O AQUECEDOR, RETIRAR O REVESTIMENTO INDICADO PARA EVITAR DANOS.**
DK - OBS FJERN DET ANGIVNE DÆKSEL, INDEN OVNEN FLYTTES FOR AT UNDGÅ SKADE.	

ISIDORA H16 5.0 EVO

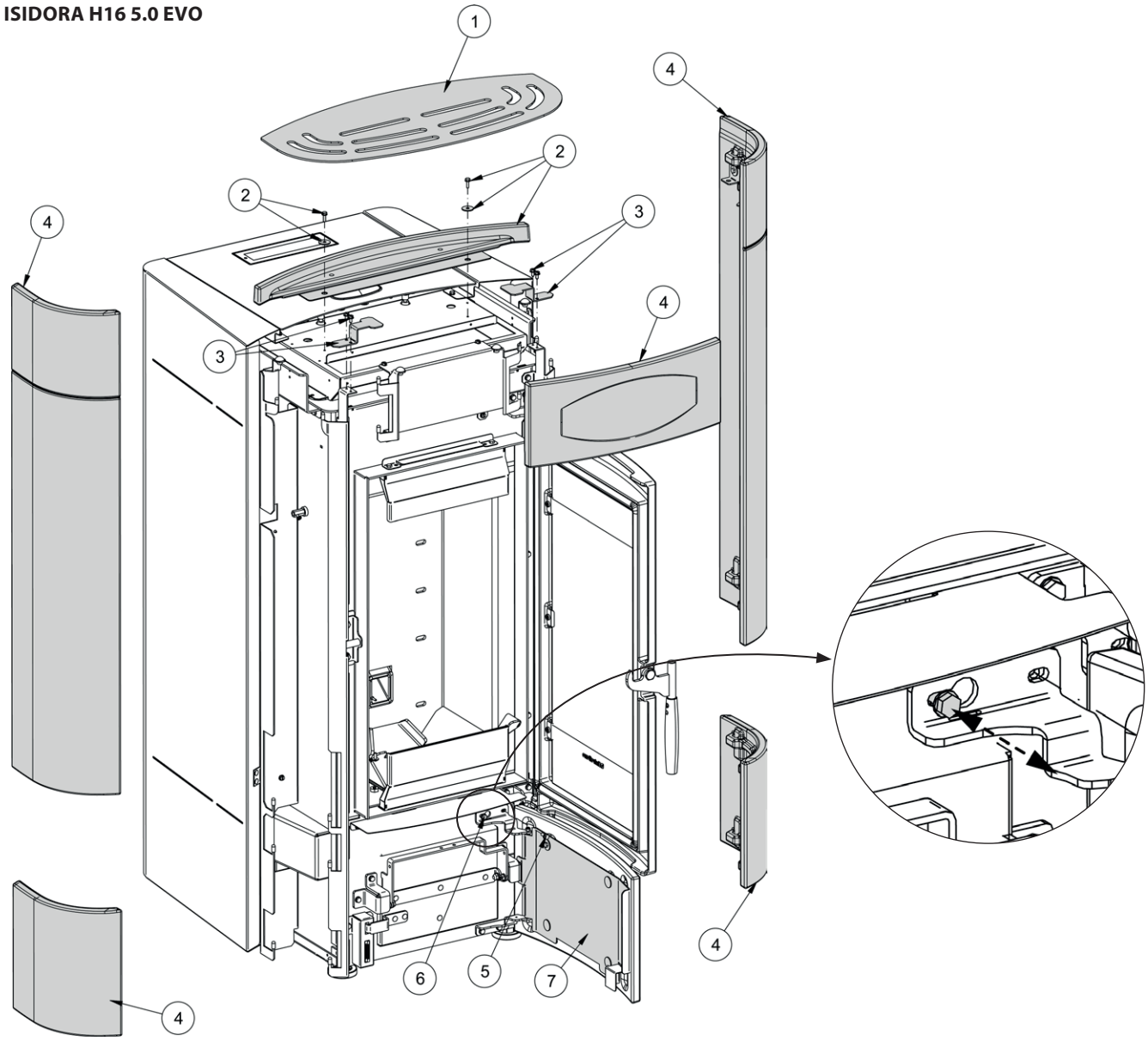

IT - ATTENZIONE TASSATIVO **PRIMA DI MOVIMENTARE LA STUFA TOGLIERE IL RIVESTIMENTO INDICATO PER EVITARE DANNI.**	**EN - WARNING** **BEFORE HANDLING THE STOVE, THE COVERING INDICATED MUST BE REMOVED TO AVOID DAMAGE.**
FR - ATTENTION IMPÉRATIF **AVANT DE DÉPLACER LE POÊLE, RETIRER LE REVÊTEMENT INDIQUÉ POUR ÉVITER TOUT DOMMAGE.**	**DE - ACHTUNG PFLICHT** **BEVOR DER OFEN BEWEGT WIRD, MUSS DIE ANGEZEIGTE VERKLEIDUNG ENTFERNT WERDEN, UM SCHÄDEN ZU VERMEIDEN.**
ES - ATENCIÓN TAXATIVO **ANTES DE MANEJAR LA ESTUFA QUITE EL REVESTIMIENTO INDICADO PARA EVITAR DAÑOS.**	**PT - ATENÇÃO OBRIGATÓRIO** **ANTES DE MOVIMENTAR O AQUECEDOR, RETIRAR O REVESTIMENTO INDICADO PARA EVITAR DANOS.**
DK - OBS **FJERN DET ANGIVNE DÆKSEL, INDEN OVNEN FLYTTES FOR AT UNDGÅ SKADE.**	

ISIDORA H20-H23 5.0 EVO

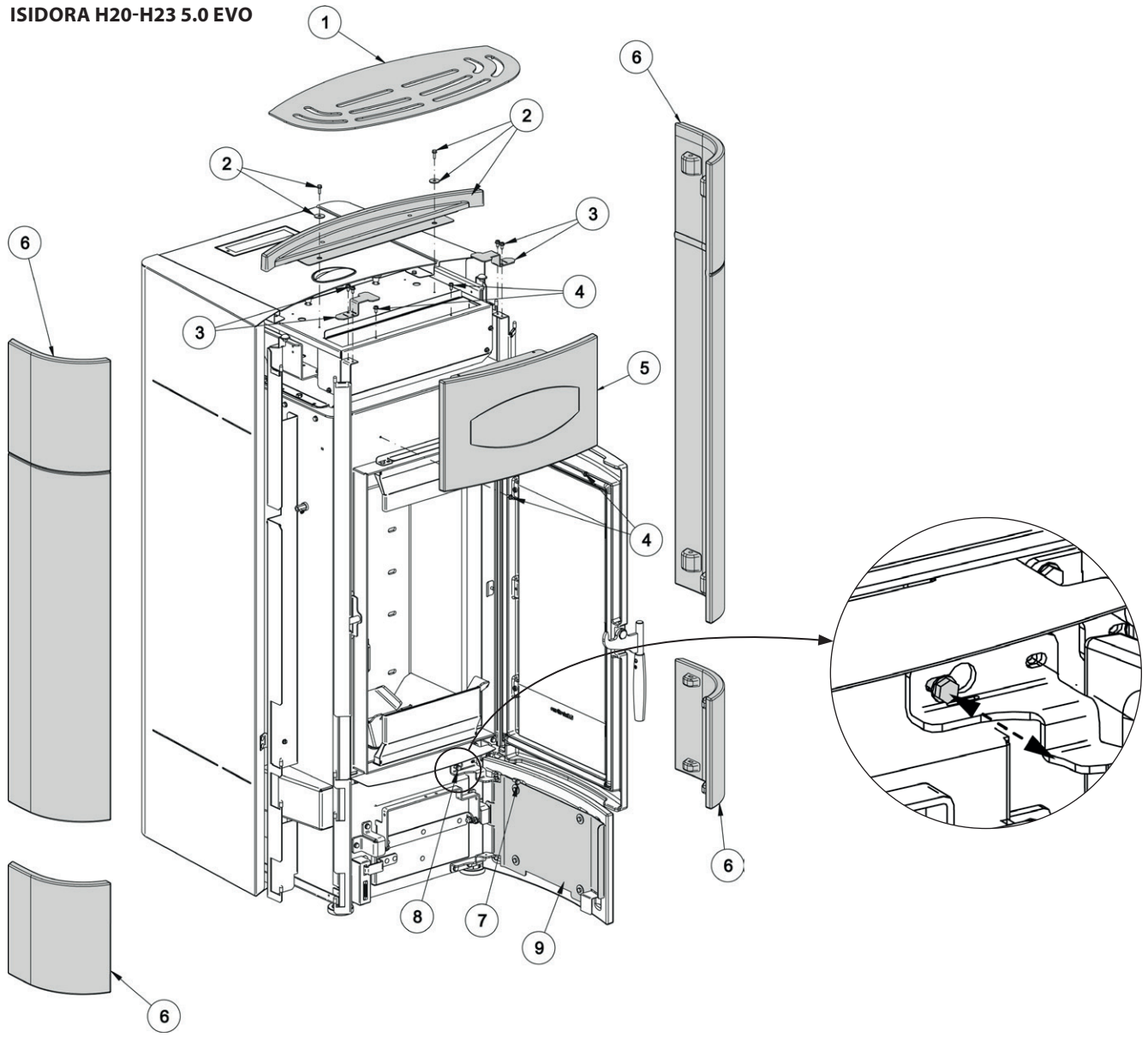

We thank you for having chosen our company; our product is a great heating solution developed from the most advanced technology with top quality machining and modern design, aimed at making you enjoy the fantastic sensation that the heat of a flame gives, in complete safety.

WARNINGS

This instructions manual is an integral part of the product: make sure that it always accompanies the appliance, even if transferred to another owner or user, or if transferred to another place. If it is damaged or lost, request another copy from the area technician. This product is intended for the use for which it has been expressly designed. The manufacturer is exempt from any liability, contractual and extracontractual, for injury/damage caused to persons/animals and objects, due to installation, adjustment and maintenance errors and improper use.
Installation must be performed by qualified staff, which assumes complete responsibility for the definitive installation and consequent good functioning of the product installed. One must also bear in mind all laws and national, regional, provincial and town council Standards present in the country in which the appliance has been installed, as well as the instructions contained in this manual.
The use of the appliance must comply with all local, regional, national and European regulations.
The Manufacturer cannot be held responsible for the failure to comply with such precautions.
After removing the packaging, ensure that the content is intact and complete. Otherwise, contact the dealer where the appliance was purchased.
All electric components that make up the product must be replaced with original spare parts exclusively by an authorised after-sales centre, thus guaranteeing correct functioning.

SAFETY

- **THE APPLIANCE MAY BE USED BY CHILDREN 8 YEARS OF AGE OR OLDER AND INDIVIDUALS WITH REDUCED PHYSICAL, SENSORY, OR MENTAL CAPACITIES OR WITHOUT EXPERIENCE OR THE NECESSARY KNOWLEDGE, PROVIDED THAT THEY ARE SUPERVISED OR HAVE**

RECEIVED INSTRUCTIONS ON SAFE USE OF THE APPLIANCE AND THAT THEY UNDERSTAND THE INHERENT DANGERS.

- THE GENERATOR MUST NOT BE USED BY PERSONS (INCLUDING CHILDREN) WITH REDUCED PHYSICAL, SENSORY AND MENTAL CAPACITIES OR WHO ARE UNSKILLED PERSONS, UNLESS THEY ARE SUPERVISED AND TRAINED REGARDING USE OF THE APPLIANCE BY A PERSON RESPONSIBLE FOR THEIR SAFETY.
- THE CLEANING AND MAINTENANCE REQUIRED BY THE USER MUST NOT BE PERFORMED BY CHILDREN WITHOUT SUPERVISION.
- CHILDREN MUST BE CHECKED TO ENSURE THAT THEY DO NOT PLAY WITH THE APPLIANCE.
- DO NOT TOUCH THE GENERATOR WHEN YOU ARE BAREFOOT OR WHEN PARTS OF THE BODY ARE WET OR DAMP.
- IT IS FORBIDDEN TO MODIFY THE APPLIANCE IN ANY WAY.
- DO NOT PULL, REMOVE, TWIST THE ELECTRICAL CABLES COMING OUT OF THE PRODUCT EVEN IF IT IS DISCONNECTED FROM THE MAINS.
- IT IS ADVISED TO POSITION THE POWER SUPPLY CABLE SO THAT IT DOES NOT COME INTO CONTACT WITH HOT PARTS OF THE APPLIANCE.
- THE POWER SUPPLY PLUG MUST BE ACCESSIBLE AFTER INSTALLATION.
- DO NOT CLOSE OR REDUCE THE DIMENSIONS OF THE AIRING VENTS IN THE PLACE OF INSTALLATION. THE AIRING VENTS ARE ESSENTIAL FOR CORRECT COMBUSTION.
- THE COMBUSTION CHAMBER DOOR MUST ALWAYS BE CLOSED WHEN THE STOVE IS OPERATING AND MUST ONLY BE OPENED TO ADD FUEL, LIGHT AND CLEAN IT.
- THE HEARTH DOOR MUST ALWAYS BE CLOSED DURING NORMAL FUNCTIONING OF THE PRODUCT.
- WHEN THE APPLIANCE IS FUNCTIONING AND HOT TO THE TOUCH, ESPECIALLY ALL EXTERNAL SURFACES, ATTENTION MUST BE PAID
- CHECK FOR THE PRESENCE OF ANY OBSTRUCTIONS BEFORE SWITCHING THE APPLIANCE ON FOLLOWING A PROLONGED PERIOD OF INACTIVITY.
- THE GENERATOR HAS BEEN DESIGNED TO ADJUST ITSELF AUTOMATICALLY IN PARTICULAR OPERATING CONDITIONS
- THE GENERATOR HAS BEEN DESIGNED TO FUNCTION IN ANY CLIMATIC CONDITION. IN PARTICULARLY ADVERSE CONDITIONS (STRONG WIND, FREEZING) SAFETY SYSTEMS MAY INTERVENE

THAT SWITCH THE GENERATOR OFF. IF THIS OCCURS, CONTACT THE TECHNICAL AFTER-SALES SERVICE AND ALWAYS DISABLE THE SAFETY SYSTEMS.

- **IN THE EVENT THE FLUE CATCHES FIRE, USE SUITABLE SYSTEMS FOR SUFFOCATING THE FLAMES OR REQUEST HELP FROM THE FIRE BRIGADE.**
- **THIS APPLIANCE MUST NOT BE USED TO BURN WASTE**
- **NEVER USE PETROL, KEROSENE, LIGHTER FUEL, ETHANOL OR SIMILAR LIQUIDS TO START OR "RELIGHT" THE GENERATOR.**
- **DURING THE FILLING PHASE DO NOT PUT THE BAG OF PELLETS TO INTO CONTACT WITH THE PRODUCT**
- **THE MAJOLICAS ARE TOP QUALITY ARTISAN PRODUCTS AND AS SUCH CAN HAVE MICRO-DOTS, CRACKLES AND CHROMATIC IMPERFECTIONS. THESE FEATURES HIGHLIGHT THEIR VALUABLE NATURE. DUE TO THEIR DIFFERENT DILATION COEFFICIENT, THEY PRODUCE CRACKLING, WHICH DEMONSTRATE THEIR EFFECTIVE AUTHENTICITY. TO CLEAN THE MAJOLICAS, IT IS RECOMMENDED TO USE A SOFT, DRY CLOTH. IF A DETERGENT OR LIQUID IS USED, THE LATTER COULD PENETRATE INSIDE THE CRACKLES, HIGHLIGHTING THEM.**
- **SINCE THE PRODUCT CAN TURN ON AUTOMATICALLY THANKS TO THE TIMER, OR REMOTELY USING THE DEDICATED APPLICATIONS, IT IS STRICTLY FORBIDDEN TO LEAVE ANY COMBUSTIBLE OBJECT WITHIN THE SAFETY DISTANCES INDICATED ON THE TECHNICAL DATA PLATE.**
- **INTERNAL COMBUSTION CHAMBER PARTS CAN BE SUBJECT TO EXTETICAL WARN, IT DOESN'T AFFECT THE FUNCTIONALITY**

ROUTINE MAINTENANCE

Based on Decree 22 January 2008 n°37 art.2, routine maintenance means interventions aimed at reducing degradation due to normal use, as well as dealing with accidental events entailing the need of first interventions, which however do not modify the structure of the system upon which one is intervening or its intended use according to the requirements laid down by the technical standards in force and by the manufacturer's use and maintenance manual.

INSTALLATION

GENERAL

The support surfaces and/or points must have a suitable load-bearing capacity to support the weight of the appliance, of the accessories and coatings.The generator must be on the level for correct operation.
The flue extraction and hydraulic connections must be carried out by qualified personnel who must issue documentation of conformity according to the regulations of the country of installation.
The installer must give the owner or their representative, the declaration of system conformity, in accordance with current legislation, including:

1) the use and maintenance manual of the appliance and of the system components (such as for example, the smoke ducts, chimney, etc.);
2) photocopy or photograph of the chimney plaque;
3) system booklet (where applicable).

The installer must ask to be issued with a receipt stating that the documentation has been provided, and must keep it with a copy of the technical documentation relating to the installation.
If installed in a condominium, the administrator must be consulted beforehand.
If necessary, check the exhaust fume emissions after installation.Any inspection point included should be watertight.

COMPATIBILITY
Installation in premises with fire hazards is forbidden.Installation in residential premises where the following situations occur is also prohibited:

1. where there are liquid fuel-operated appliances with continuous or intermittent operation, which draw the combustion air in the room in which they are installed.
2. where there are type B gas appliances intended for room heating, with or without production of DHW and in adjacent and adjoining premises.
3. where, in any case, the pressure difference measured during installation between the internal and external environment is greater than 4 Pa.

N.B.:Watertight appliances can also be installed in the cases indicated by points 1, 2 and 3 of this paragraph.

INSTALLATIONS IN BATHROOMS, BEDROOMS AND STUDIO FLATS
Installation in bathrooms, bedrooms and studio flats is only allowed for sealed or closed hearth appliances with ducted combustion air taken from the outside.

MINIMUM DISTANCES FROM COMBUSTIBLE MATERIALS

Installation adjacent to combustible or heat-sensitive materials is permitted, **provided that suitable safety clearances are maintained, as indicated in the CEMI (CE Marking Information), in the Declaration of Performance (DoP) and on the technical data plate affixed to the appliance.**

Note valid only for pellet inserts (EN 16510-2-6): A copy of the technical data plate is also included in the documentation supplied with the appliance.

We suggest using non-combustible material for the side and rear walls and support surface on the floor.
If the floor is made of combustible material, it is recommended to use a non-combustible protective layer, which must cover the area under the appliance and extend forward by at least the distance specified as d_F.
For installation near non-flammable materials, a minimum side and rear clearance must be maintained, as indicated by the distance marked d_{non}.
For products with rear spacers, installation flush with the wall is allowed at the rear only.

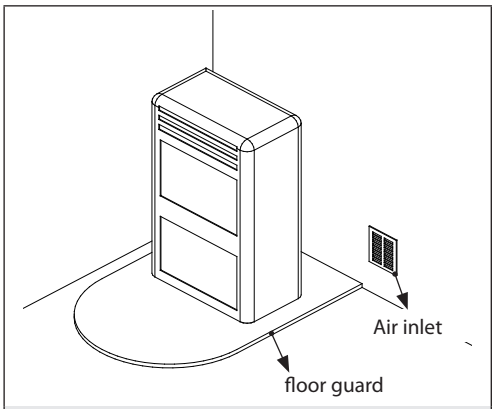

One must also bear in mind all laws and national, regional, provincial and town council standards present in the country in which the appliance has been installed, as well as the instructions in this manual.

MAINTENANCE PREPARATION

It might be necessary to place the product away from adjacent walls for maintenance operations.This operation must be carried out by a technician who is qualified to disconnect the flue gas evacuation ducts and subsequent connection.For generators connected to the plumbing system, a connection must be provided between the system and the stove that allows the generator to be moved at least 1 metre away from adjacent walls during extraordinary maintenance work performed by a qualified technician

INSTALLATION OF INSERTS

When installing inserts, it is necessary to prevent access to the internal parts of the appliance, and when removing them, it must not be possible to access live parts.
Any wiring, such as the power cable or room probes, must be positioned in such a way that they are not damaged when the insert is moved and do not come into contact with hot parts.If a cavity made of combustible material is installed, it is advisable to take all the safety precautions indicated in the installation regulations

VENTILATION AND AERATION OF THE INSTALLATION PREMISES

Ventilation, in the case of a non-watertight generator and/or non-watertight installation, must be carried out respecting the minimum area indicated below (considering the largest of the values suggested:

Appliance categories	Reference standard	Percentage of the net opening section with respect to the appliance fumes outlet section	Minimum net opening value of the ventilation duct
Pellet stoves	EN 16510-1; EN 16510-2-6	-	80 cm^2
Boilers	EN 303-5	50%	100 cm^2

The difference in pressure between the generator installation rooms and the exterior must always be ≥ -4 Pa under any condition (e.g. -3 Pa is an acceptable value), including in the presence of extraction hoods and/or controlled forced ventilation systems

The air inlets must meet the following requirements:
- They must be protected with grids, metal mesh, etc., but without reducing the net useful section;
- They must be made so as to make the maintenance operations possible;
- Positioned so that they cannot be obstructed;

The inflow of clean, uncontaminated air can also be obtained from a room next to the installation room (indirect ventilation and aeration) as long as this flow can occur freely through permanent openings communicating with the outside.
The adjacent room cannot be used as a garage, warehouse of combustible material or for any other activity with a fire hazard, bathroom, bedroom or common room of the building.

FLUE DISCHARGE

The heat generator works under a vacuum and is fitted with an outlet fan for fumes extraction.The exhaust system must be used by the generator only. No flue discharges shared with other devices are allowed.

The components of the flue gas evacuation system for combustion products must be chosen and sized in accordance with current regulations, depending on the specific situation at the place of installation.
The following checks are recommended:

- The flue system must be assessed in accordance with the following technical standards (where applicable):EN 15287-1, EN 15287-2, EN 13063-1, EN 13063-2, EN 1457, EN 1806, EN 1856-1, EN 1856-2 and EN 13384-1;
- The correct operation of the flue system must be checked in accordance with the EN 13384-2 standard based on the specific situation at the place of installation;
- The installation of watertight appliances must also take the EN 13063-3 and EN 14989-2 standards into account;
- Where the design provides for operation in humid conditions, there must be a suitable condensate collection system and possibly a siphoned drain.
- The length of the horizontal section should be minimal and, in any case, no longer than 2 metres, with a minimum upward gradient of 3%
- The number of direction changes including the one due to the use of the "T" element must not be more than 4.
- A “T” fitting with a condensation collection cap must be included at the base of the vertical section.
- The vertical pipe can be on the inside or outside of the building.If the flue is fitted in an existing chimney, it must be certified for solid fuels.
- If the flue is outside the building, it must always be insulated.
- The flue must have at least one sealed outlet for possible fume sampling.
- All the sections of the flue pipe must be accessible for inspection.
- Inspection openings must be included for cleaning.

If metal pipes are used, they must comply with the following requirements (EN 1856-1 and EN1856-2):

- Flue pipe - Temperature class (as indicated in the technical datasheet) resistant to soot fire
- Flue pipe - Temperature class, at least T250, Pressure class, P1 (not indicated in the technical datasheet)

CHIMNEY COWL

The chimney caps must meet the following requirements:
- they must have a useful outlet section no less than double of that of the chimney/ducted system on which it is installed;
- they must be adapted in order to prevent the penetration of rain and snow in the chimney/ducted system;
- they must be built so that, in the event of winds coming from all directions and from any angle, the expulsion of combustion products is in any case ensured;

SHARED CHIMNEY FLUE

Check on the CE Technical Data Sheet whether the product is suitable for installation in a shared chimney flue (i.e. with multiple connection).

Suitable devices can be installed in shared flue systems provided that:
- installation in a shared chimney flue (i.e. with multiple connection) is allowed in the place of installation;
- the requirements of national and regional Standards are strictly complied with [for GERMANY, for example, DIN EN 13384-2, DIN V 18160-1, DIN 18896 and MFeuV-2007 (Muster-Feuerungsverordnung)];
- the installer or district chimney sweep has inspected and approved the installation conditions.

Please also remember the following indications, which the end user must comply with:
- The device can be operated only with the doors closed.
- The doors and all setting devices must remain closed when the device is not on (except for cleaning and maintenance operations).

EXAMPLES OF CORRECT CONNECTION TO THE CHIMNEY

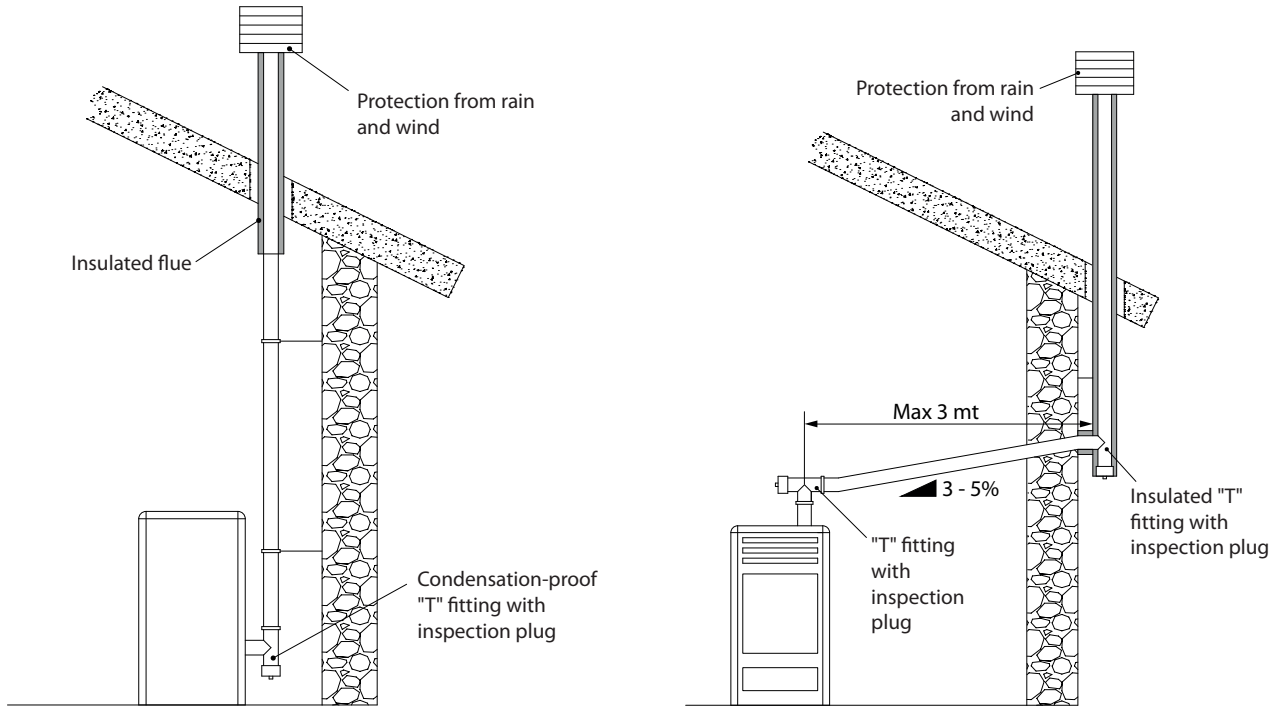

CONNECTION TO THE ELECTRICITY GRID

The generator is supplied with a power cable for connection to a 230V 50 Hz socket, possibly with a circuit breaker.The power socket must be easily accessible.
The electrical system must be compliant; check the efficiency of the grounding circuit in particular.Inadequate grounding of the system can cause a malfunction for which the manufacturer is not responsible.
Power fluctuations over 10% may cause product malfunctions.

HYDRAULIC SYSTEM

Certain concepts referring to the Italian Standard UNI 10412-2 (2009) are described in this chapter.
As previously described, when installing, all national, regional, provincial and council Standards in force provided by the country in which the appliance has been installed must be complied with.
During installation of the generator it is MANDATORY to adjust the system with a manometer in order to display the water pressure.

TABLE OF SAFETY DEVICES FOR CLOSED VESSEL SYSTEM AND NOT PRESENT IN THE PRODUCT	
Safety valve	✓
Pump control thermostat (it is managed by the water probe and the board program)	✓
Water temperature indicator (display)	✓
Pressure transducer with display	✓
Automatic circuit breaker adjustment switch (managed by board program)	✓
Pressure transducer with minimum and maximum pressure switch alarm	✓
Water overheating automatic circuit breaker switch (block thermostat)	✓
Circulation system (pump)	✓
Expansion system	✓

Pay attention to the correct sizing of the system:

- generator power compared to the thermal requirement
- possible need for a buffer tank

INSTALLATION AND SAFETY DEVICES

The installation, relative system connections, commissioning and inspection of correct functioning must be carried out perfectly, in full compliance with Standards in force, national, regional and municipal, as well as these instructions. For Italy, installation must be carried out by professionally qualified staff (Ministerial Decree dated 22.01.08 n°37).
Extraflame S.p.A. declines all responsibility for damage to objects and/or persons caused by the system.

TYPE OF SYSTEM

- There are 2 different types of system:
- Open vessel system and closed vessel system.
- The product has been designed and made to work with closed vessel systems.

CHECK THAT THE PRELOAD OF THE EXPANSION VESSEL IS SET TO 1.5 BAR.

SAFETY DEVICES FOR CLOSED VESSEL SYSTEM

In accordance with the UNI 10412-2 (2009) regulation in force in Italy, all the closed systems must be fitted with: safety valve, pump control thermostat, temperature indicator, pressure indicator, automatic circuit breaker block switch (block thermostat), circulation system, expansion system, and safety dissipation built-in to the generator with thermal safety valve (self-activated), if the appliance does not have a temperature self-adjustment system.

DISTANCES OF SAFETY DEVICES ACCORDING TO THE STANDARD

The temperature safety sensors must be in place on the machine at a distance no greater than 30 cm from the flow connection. Whenever the generators lack a device, those missing can be installed on the generator flow pipe, within a distance no greater than 1 m from the machine.

COMMISSIONING CHECKS

Before connecting the boiler:
a) wash all system piping thoroughly in order to remove any residues which might compromise the correct functioning of certain system components (pumps, valves, etc.).
b) The company recommends installing a magnetic filter in the generator return, to increase the operational life of the boiler, make it easier to remove impurities and increase the overall efficiency of the system.
It is also advisable to perform an inspection using appropriate instruments, to check for any stray currents that may cause corrosion.
c) check to verify that the flue has adequate draught, that it is not narrowed and that other appliances do not discharge into the flue. This is to prevent unexpected power increases. The flue fitting can be mounted between the boiler and the flue only after this inspection. An inspection of the connections with pre-existing flues is recommended.

ANTI-CONDENSATION DEVICE (MANDATORY)

Make sure a suitable anti-condensate circuit has been realised, which guarantees an appliance return temperature of at least 55°C. The automatic thermostatic valve, for instance, is used in solid fuel boilers as it prevents cold water from returning into the exchanger. A high return temperature allows efficiency improvement, reduces formation of smoke condensation and prolongs the generator's life span. The manufacturer recommends using the 55°C model with 1" hydraulic connections.

For the products with the *PWM pump control thermostat, installation is considered equivalent to the realisation of a suitable anti-condensate circuit in the case where::
- the heat generator pump is the only one in the installation, or
- there is a plate heat exchanger between the heat generator and the installation, or
- there is a hydraulic compensator or an inertial storage tank (buffer) between the heat generator and the installation

***Check technical data sheet on website.**
Valve on sale as an accessory (optional)

DETAILS ISIDORA H16-H20-H23 5.0.EVO

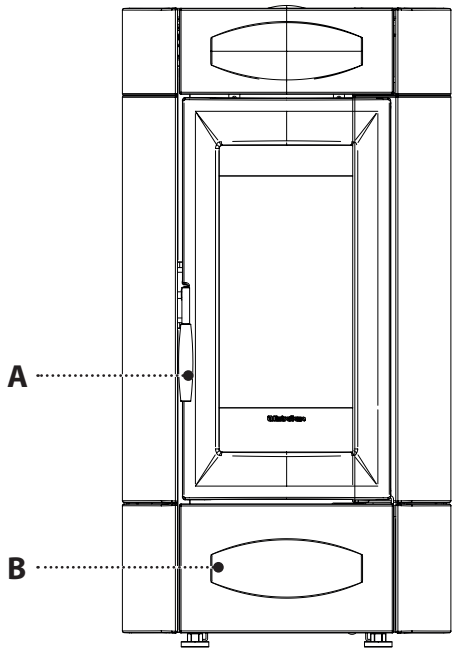

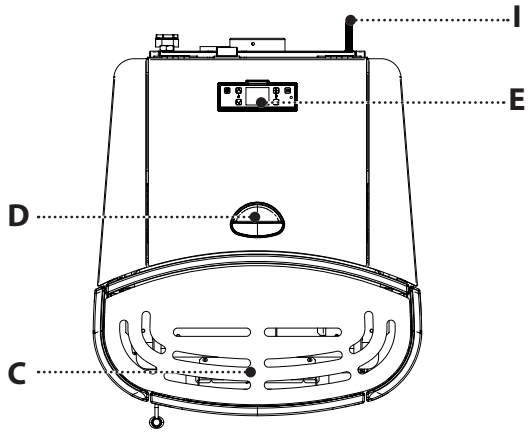

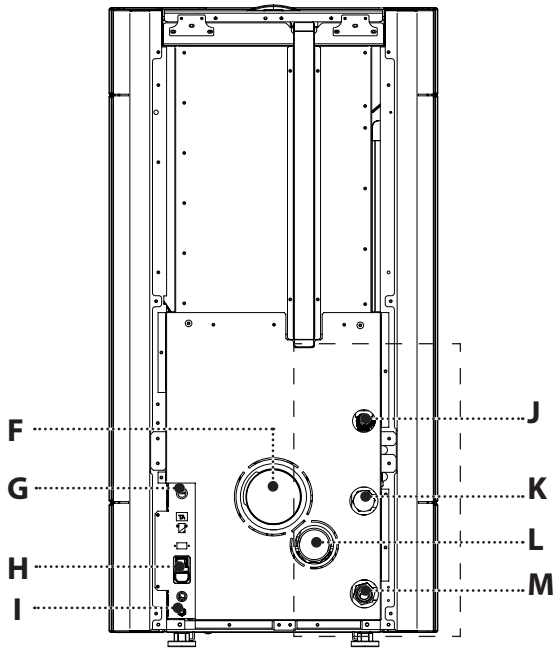

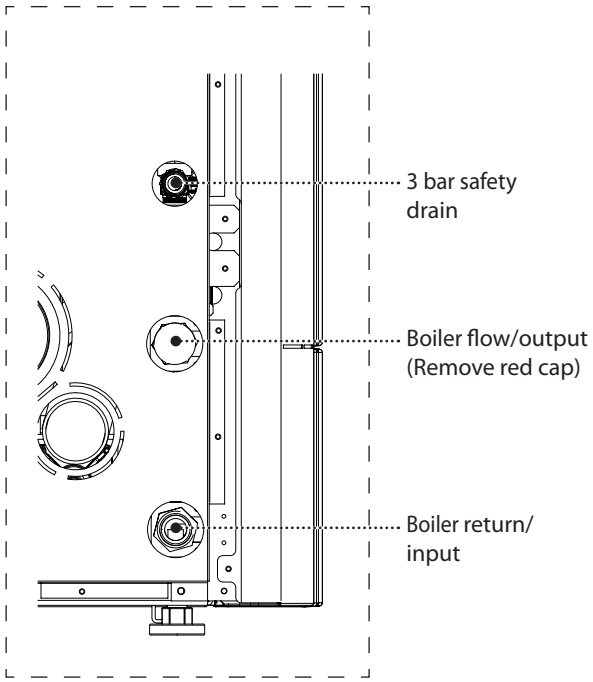

A	Door handle	**F**	Flue gas outlet	**J**	3 bar safety drain
B	Access to the ash drawer	**G**	Resetting	**K**	Boiler flow/output
C	Room air outlet	**H**	On/Off Fuse 230 V power supply	**L**	Combustion air inlet
D	Pellet hopper			**M**	Boiler return/input
E	Display	**I**	Room probe		

FEATURES	
Water content of the thermo-product heat exchanger (l)	26.7
Volume of expansion vessel integrated into thermo-product (l)	*8
3 bar safety valve integrated into the thermo-product	YES
Minimum and maximum pressure switch integrated into the thermo-product	YES
PWM pump integrated into the thermo-product	YES
Pump max. head (m)	6

* **ENVISION ANY INTEGRATIVE EXPANSION VESSEL ON THE BASIS OF THE SYSTEM WATER CONTENT.**

CONSULT THE HYDRAULIC DIAGRAMS MANUAL FOR THE DETAILS OF THE CIRCULATOR INSTALLED.

CHECKS AND MEASURES FOR COMMISSIONING

CAUTION!
FOR CORRECT GENERATOR OPERATION, THE HYDRAULIC SYSTEM PRESSURE MUST BE BETWEEN 0.6 AND 2.5 BAR.

If the pressure measured by the digital pressure switch is lower than 0.6 or higher than 2.5 bar, an alarm will be generated.
By taking the pressure of the water within standard values, the alarm can be reset by pressing the ⏻/1 key for 3 seconds
(The alarm can be reset only if the fumes motor has stopped and 15 minutes have passed since the alarm was displayed)

It is normal that there is air inside the circuit due to filling the system.
On the 1st ignition cycle, the movement of the water causes the air bubbles to move and be bled by the system automatic venting. This too can cause the pressure to drop and may result in an alarm.

The system must be bled several times to eliminate the air and loaded when the pressure is too low.
It is not an anomaly, but normal phenomenon, due to filling. Following filling, the system must always be bled using the relevant vents in the circuit and having the machine perform the "air vent" function. (Following commissioning and with the machine cold, activate the "OUTLET AIR" function again. - see "*SETTINGS*" chapter)

BULB THERMOSTATS - RESET

Reset the thermostat by pressing the dedicated button. If the problem persists, contact a Technical Support Centre. (See chapter on RESETTING).

STOVE POSITIONING

For correct product functioning, it is recommended to position it in a way that it is perfectly level, with the aid of a spirit level.

NOTE FOR CORRECT OPERATION

ENSURE THE HOPPER IS PROPERLY CLOSED BEFORE TURNING ON THE DEVICE!

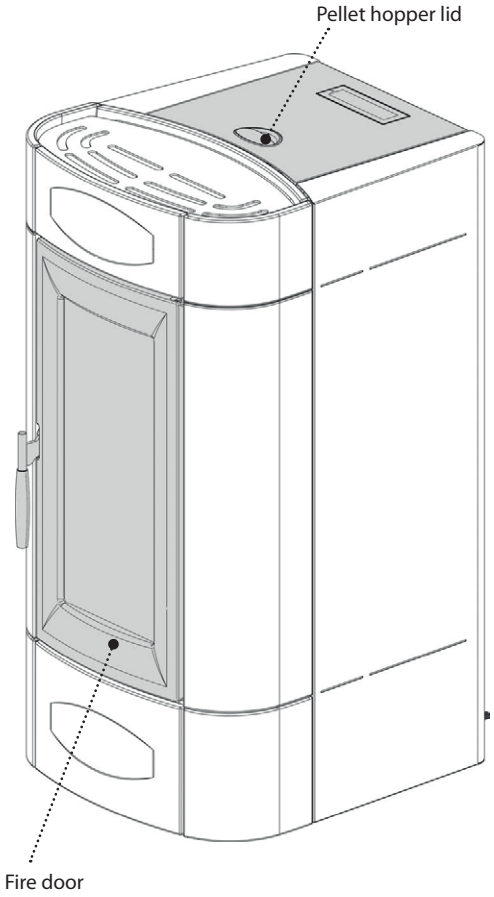

DURING START-UP:
The generator performs a check on the combustion air flow during the **START** phase.
If any faults are found, the generator will go into "**MIN DELTA-P ALARM 1**" mode.

DURING IGNITION:
be sure to keep the fire door and the tank cover closed during the entire ignition phase.
Otherwise, the stove will display

"**CLOSE HOPPER**" or "**CLOSE STOVE DOOR**"

This indication means that you have 60 seconds to close the door.

After 60 seconds have passed, the stove will go into "**DEPR ALARM**" mode during the ignition phase

DURING WORK:
be sure to keep the dire door and the tank cover closed during the entire **WORK** phase.
Otherwise, the stove will display

"**CLOSE HOPPER**" or "**CLOSE STOVE DOOR**"

This indication means that you have 60 seconds to close the door.

After 60 seconds have passed, the stove will go into "**COOLING STAND BY**" mode

If "**MIN DELTA-P**" appears, it means that the appliance has detected abnormal conditions in the combustion air or flue gas outlet flows.

If the conditions do not stabilise within the time indicated by the TIMER on the display, the stove will go into "**MIN DELTA-P ALARM 2**" mode.

RESETTING

The figure below shows the reset position (95°C). Reset the thermostat by pressing the dedicated button. If the problem persists, contact a Technical Support Centre.

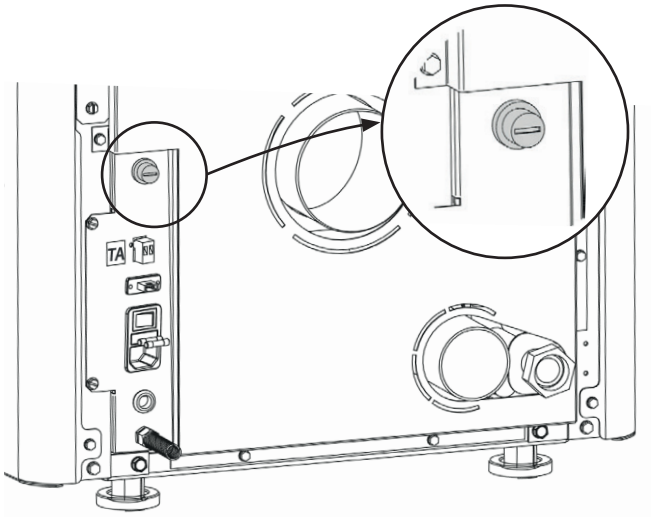

FUSE

If the stove is not powered, have the condition of the fuse checked by a qualified technician.

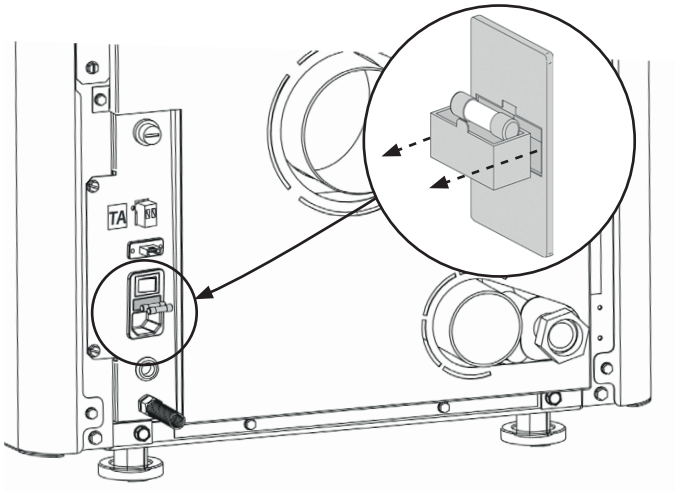

PELLETS AND LOADING

Pellets are made by subjecting wood shavings i.e. the rejects of pure unpainted wood from sawmills, carpentry products and products from other activities connected to wood working and transformation, to very high pressures.
This type of fuel is fully ecological as no glues are used for its compaction. In fact, pellet compactness is guaranteed over time by a natural substance found in wood: lignin.
In addition to being an ecological fuel, making best use of wood residue, pellets also have a series of technical advantages.
While wood has a calorific value of 4.4 kWh/kg (with 15% moisture, therefore after approximately 18 months of curing), that of pellets is 5 kWh/kg.
Pellet density is about 650 kg/m^3 and water content is equal to 8% of its weight. For this reason pellets do not need to be cured to obtain a sufficient heat yield.

The pellets used must be class **A1** certified according to standard **ISO 17225-2** (**ENplus-A1, DIN Plus** or **NF 444** of the following category: "High quality NF biocombustible wood pellets").

UNI EN 303-5 with the following characteristics: water content ≤ 12%, ash content ≤ 0.5% and lower calorific value >17 MJ/kg (in the case of boilers).

The Manufacturer recommends using pellets with a diameter of 6mm with its products.

PELLET STORAGE

To guarantee combustion without problems, the pellets must be kept in a dry place.
Open the tank lid and load the pellets using a scoop.

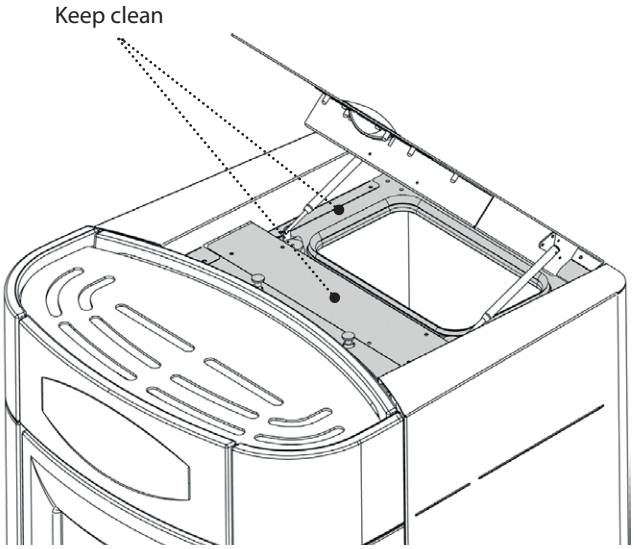

THE USE OF POOR QUALITY PELLETS OR ANY OTHER MATERIAL WILL COMPROMISE STOVE FUNCTIONS, VOIDING THE WARRANTY AND RELEASING THE MANUFACTURER OF LIABILITY.

PELLET HOPPER

During stove operation, the pellet hopper lid must always be closed.

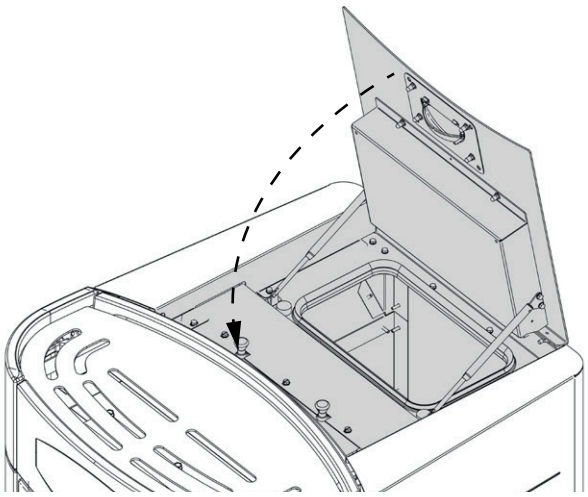

DO NOT PLACE THE BAG DIRECTLY ON THE STOVE TO LOAD THE TANK.
ALWAYS USE A SCOOP TO LOAD THE TANK. DO NOT RUB OR PLACE WEIGHTS ON THE TANK SEAL. KEEP THE TANK COVER SEAL SUPPORTING SURFACE CLEAN AT ALL TIMES. CHECK THE CONDITIONS OF THE SEAL FREQUENTLY. IF DAMAGED, CONTACT YOUR LOCAL AUTHORISED TECHNICIAN.

REMOTE CONTROL (OPTIONAL)

The remote control can be used to adjust the main stove functions.

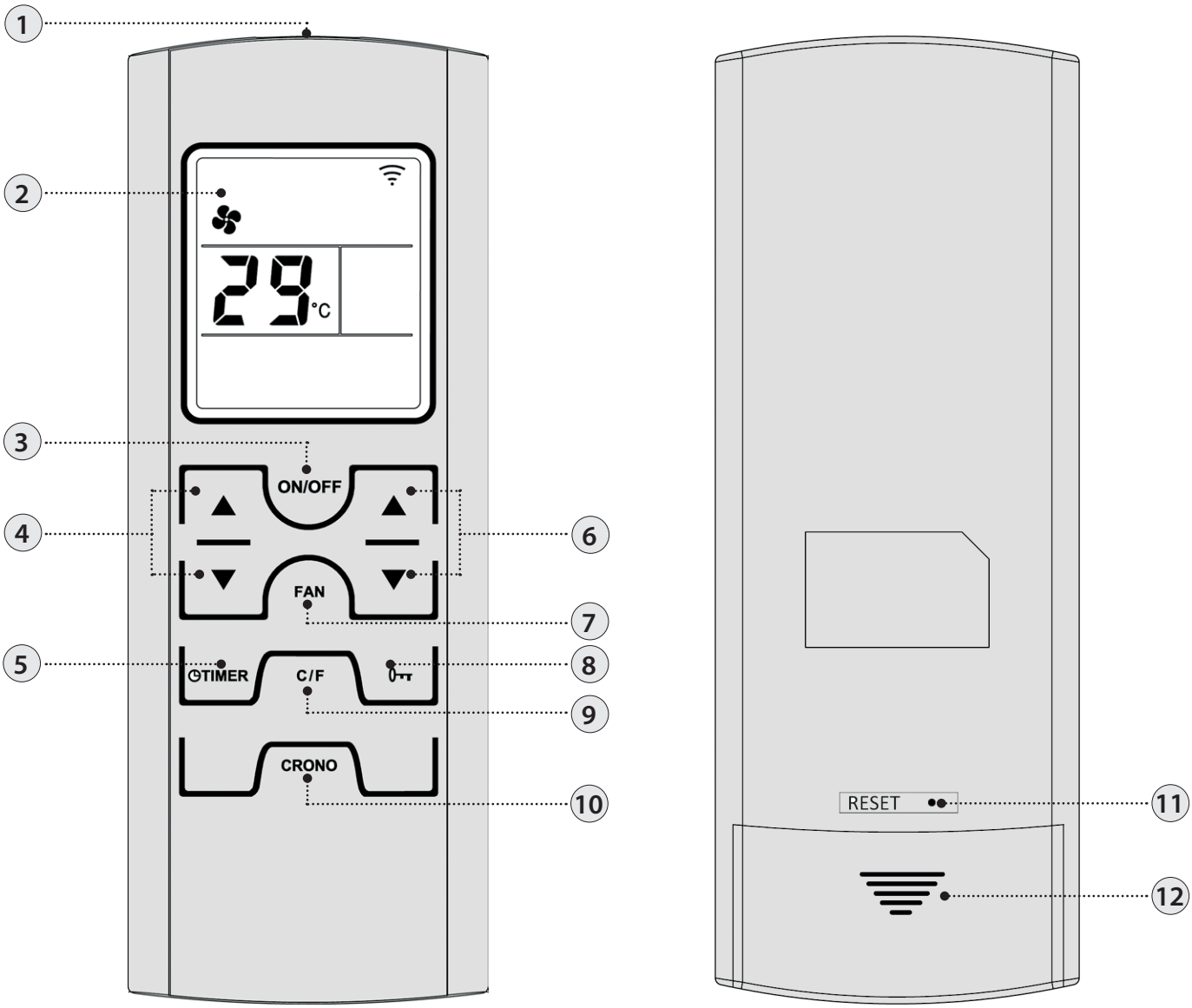

1	Transmitter	**7**	Select fan speed
2	Display	**8**	Lock keyboard
3	On/off stove (hold for 3 seconds)	**9**	Degrees Celsius / Fahrenheit
4	Set power	**10**	Press the button once to enable or disable the chrono
5	Set switch-off delay: The button allows to set the switch-off delay. For example, if you set it to one hour, the stove will automatically switch off after the set time *	**11**	Reset*
6	Set room temperature	**12**	Battery compartment

* not available in this model

REMOTE CONTROL ICONS

	Fan speed Flashing = reduced speed On = default speed (factory setting)		Enable chrono Light on = activated Light off = deactivated
OFF TIME 6:00	Set switch-off delay *		Indicates the transmission of the radio signal On = during all radio communication Off = radio communication absent
	Battery low		Keys locked
P3	Set power level. The power level is displayed, instead of the set room temperature, for 3 seconds when one of the set power buttons is pressed (4).		

INSERTING THE BATTERIES

Remove the battery compartment cover by sliding it down. Insert 2 AAA batteries.
Insert the batteries respecting the correct polarity (+) and (-).
Close the cover of the battery compartment.

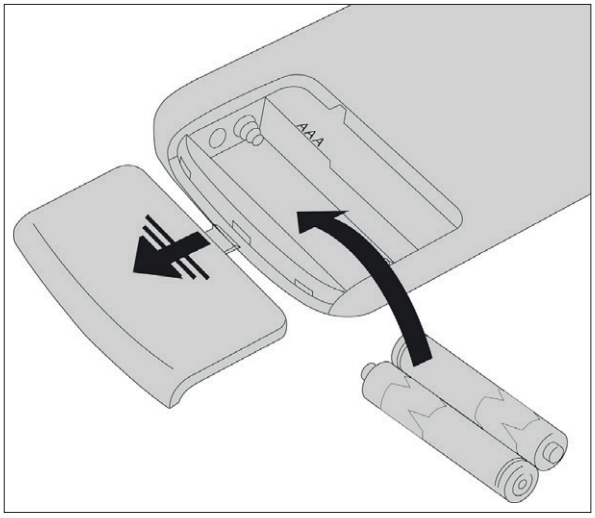

IF THE REMOTE CONTROL IS SWITCHED OFF DUE TO NO BATTERY INSTALLED, THE STOVE CAN BE CONTROLLED FROM THE COMMAND PANEL LOCATED ON THE UPPER PART OF THE STOVE. WHEN CHANGING THE BATTERIES, MAKE SURE YOU FOLLOW THE SYMBOLS PRINTED INSIDE THE REMOTE CONTROL.

Respect the environment!
Used batteries contain metals that are harmful to the environment, and therefore must be disposed of separately in special containers.

ADVICE AND PRECAUTIONS FOR THE USE OF THE REMOTE CONTROL

- Remove the batteries if it is not used for a long time.
- When being used, direct it towards the stove's signal receiver.
- Handle the remote control with care. When it is not being used, place it on the special base supplied.
- The remote control must not be left in a place where it is exposed to direct sunlight or near a source of heat.
- The quality of the signal may be affected by other IR sources.

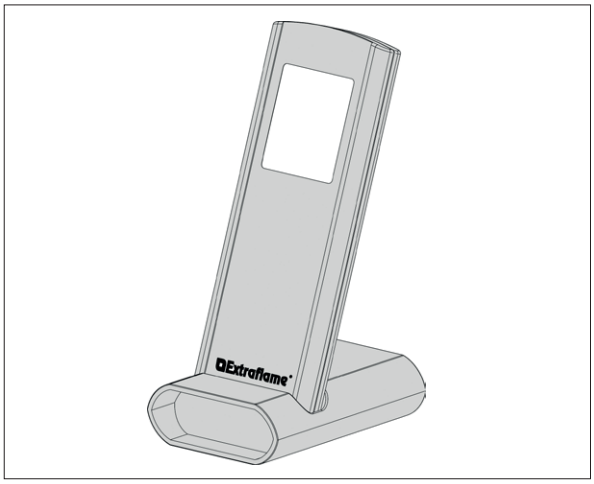

THE REMOTE CONTROL IS FITTED WITH AN LCD BACKLIT DISPLAY. THE BACKLIGHTING LASTS 20 SECONDS FROM THE LAST PRESS OF A BUTTON. AFTER A CERTAIN TIME, TO SAVE BATTERY POWER, THE DISPLAY TURNS OFF (ENERGY SAVING MODE).
THE CONTROL FUNCTIONS ARE REACTIVATED WHEN THE REMOTE IS REMOVED FROM ITS UNIT OR BY A LONG PRESS OF THE BUTTON.

* Not available in this model

CONTROL PANEL AND DISPLAY ICONS

Guide to display icons and main features

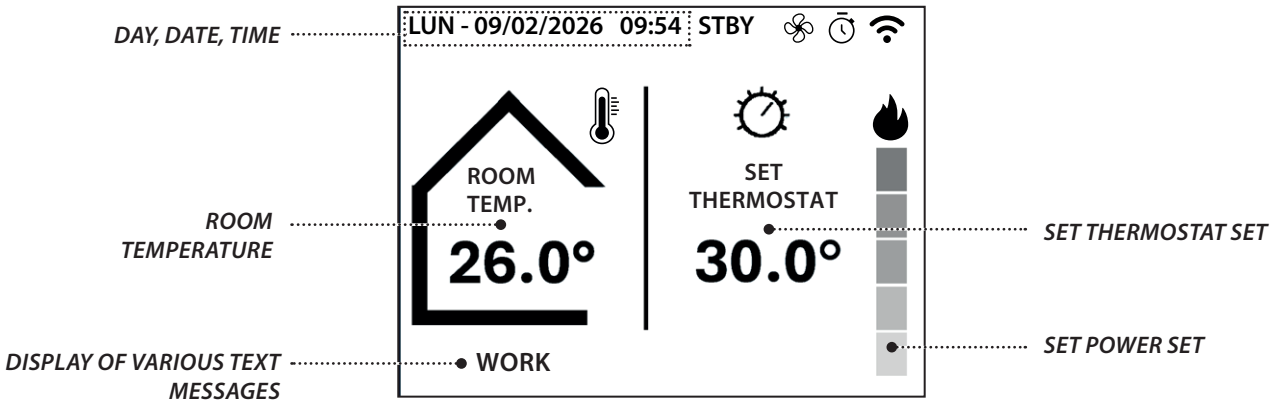

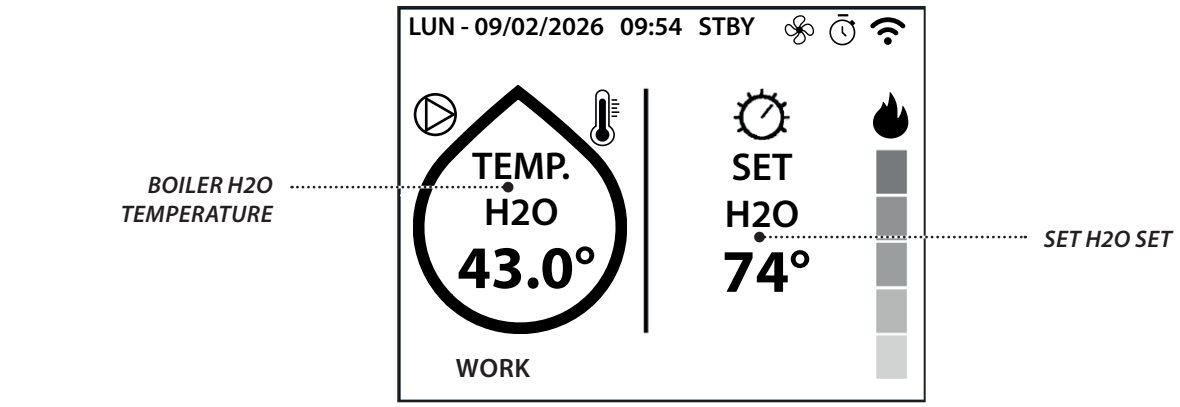

ICON KEY			
	Alarm status indication Off: indicates that there are no alarms. Steadily lit: indicates the presence of an alarm.		Cloud icon Flashing: Wi-Fi module connecting to the cloud. Steadily lit: Wi-Fi connected to the cloud.
STBY	STAND-BY function Off: function deactivated. Steadily lit: function activated.		Bluetooth icon Steadily lit: the Wi-Fi module is connected via Bluetooth
	Indicates the operation of the tangential fan. Off: ventilation not active. Steadily lit: ventilation active.		Flame icon Indicates the stove power. Flashing: power is increasing or decreasing. Steadily lit: power stable.
	Indicates the status of the weekly programming Off: programming not active. Steadily lit: programming active. Number displayed: indicates the currently active time slot.		Thermometer icon Indicates the status of SET H2O and room SET THERMOSTAT. Green: SET TEMPERATURE reached. Red: SET TEMPERATURE not yet reached.
	Wi-Fi icon Off: Wi-Fi communication not present Flashing: Wi-Fi module connecting to the router. Steadily lit: Wi-Fi module connected to the home router, with no cloud access.		It indicates the operation of the pump. Off: pump stopped. Flashing: electronic anti-condensation function active. Steadily lit: pump active.

KEY FUNCTIONS

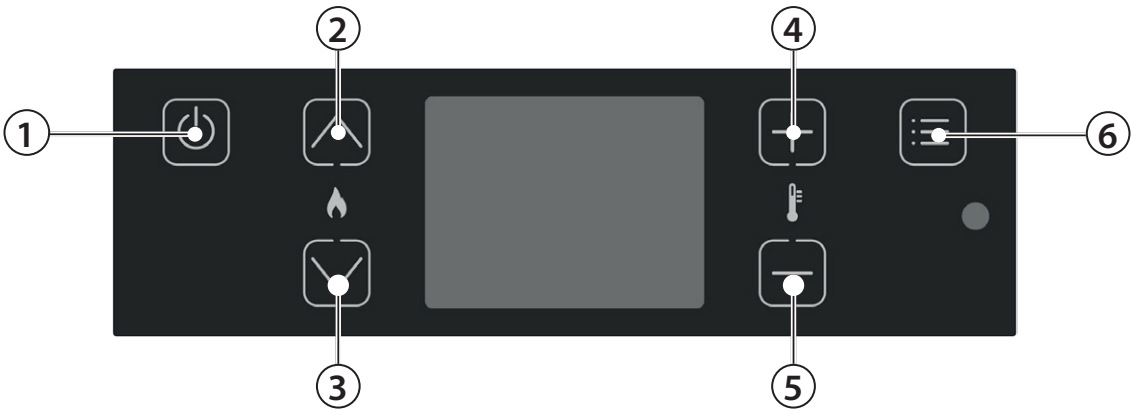

1	On/off stove.
2	Increase operating power / scroll through the menus.
3	Decrease operating power / scroll through the menus.
4	Increase operating set thermostat / Change data in the menus.
5	Decrease operating set thermostat / Change data in the menus.
6	To access the menu / confirm key.

MENU STRUCTURE

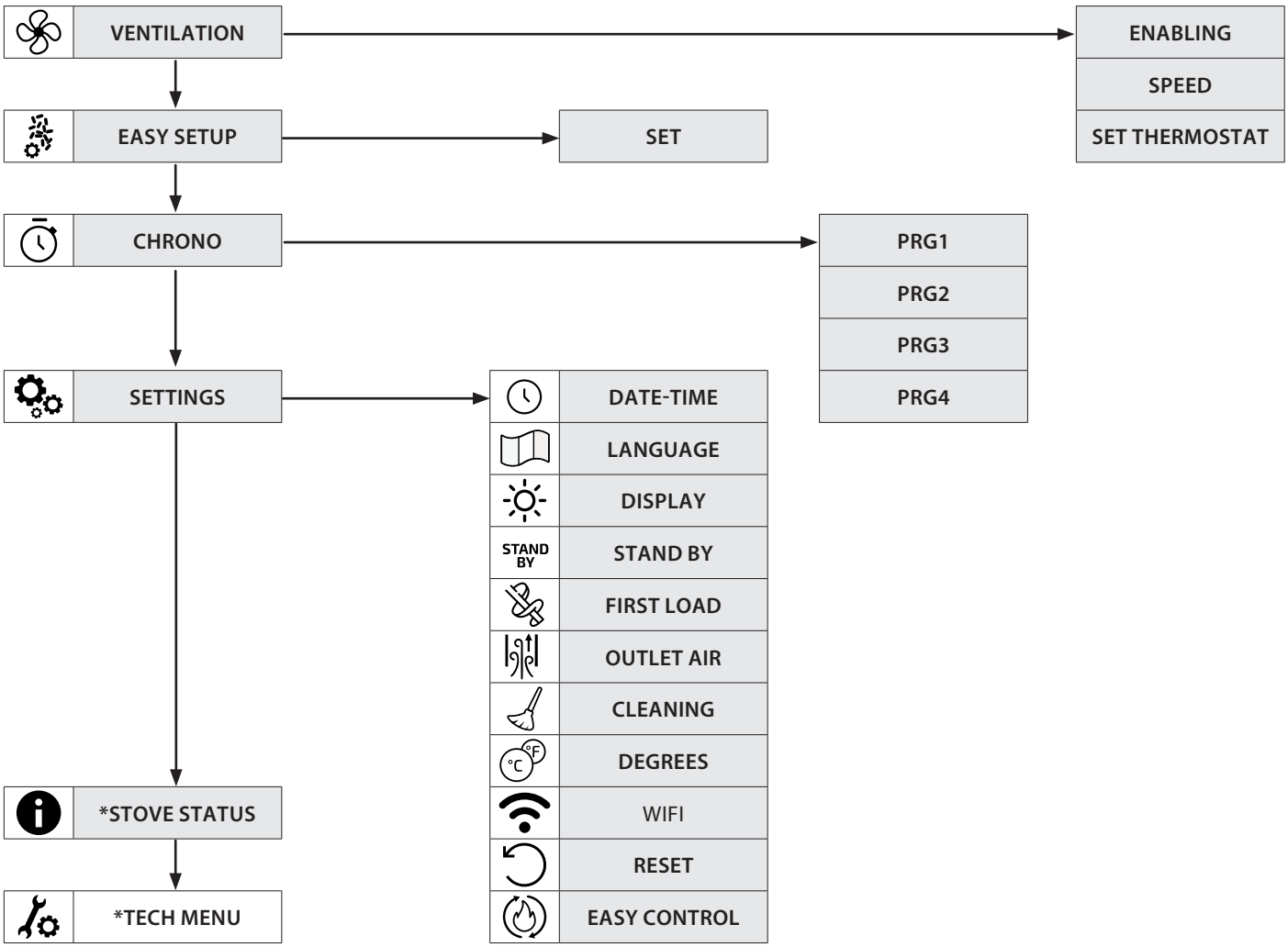

GENERAL WARNINGS

Advice to follow for the first start-ups of the product:
During the first hours of operation, there may be some smoke or odours, but they are due to the normal "thermal break-in" process. During this process, the duration of which changes depending on the product, it is recommended to:

- Ventilate the room well
- If present, remove any majolica or natural stone parts from the top part of the product
- Activate the product at the maximum power and temperature
- Avoid remaining in the room for a long time
- Do not touch the surfaces of the product

Notes:
The process is completed after a few heating/cooling cycles.
For combustion, do not use elements or substances other than those indicated in the manual.

Before turning on the product, it is necessary to perform the following checks:

- If it is intended to be connected to a hydraulic system, it must be complete and fully functional and in compliance with the instructions given in the product manual and with the relevant regulations in force.
- The pellet hopper must be fully loaded
- The combustion chamber and the burn pot must be clean
- Make sure that the fire holder, the ash drawer and the pellet hopper close hermetically (if present in the hermetic version); they must be closed and there must be no foreign bodies in the sealing elements and gaskets.
- Check that the power cord is properly connected
- The switch (if present) must be set to position "1".

MAKE SURE THAT THERE ARE NO RESIDUES OR DIRT IN THE BURN POT. THE HOLES AT THE BOTTOM OF THE BURN POT MUST BE COMPLETELY FREE TO GUARANTEE PROPER COMBUSTION. THE "EASY SETUP" FUNCTION CAN BE USED TO ADAPT COMBUSTION BASED ON THE DESCRIBED NEEDS.

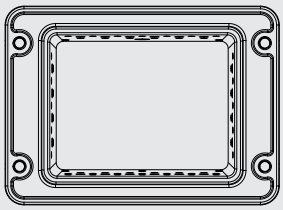

BURN POT BOTTOM

FIRST IGNITION SETTINGS

Once the power cord at the back of the stove has been connected, move the switch, also located on the back, to (I).

DATE-TIME

This menu allows the date and time to be set.

CONTROLS PROCEDURE

- Press key 6.
- Press key 3 until **SETTINGS** appears and confirm by pressing key 6.
- Confirm **DATE-TIME** by pressing 6 and using 4 and 5 to set the day.
- Continue by pressing key 6.
- Use the same procedure with 4 or 5 to choose the setting and 6 to move continue, to set the hour, minutes, date, month and year.
- Press key 6 to confirm and key 1 to scroll back through the menus until the initial state.

LANGUAGE

This menu allows the preferred language to be selected.
The available languages are: Italian - English - German - French - Spanish - Portuguese - Danish - Estonian - Croatian - Slovenian - Dutch - Polish - Czech.

CONTROLS PROCEDURE

- Press key 6.
- Press key 3 until **SETTINGS** appears and confirm by pressing key 6.
- Press 3 until **LANGUAGE** appears and confirm by pressing 6.
- Select the language using keys 4 or 5.
- Press key 6 to confirm and key 1 to scroll back through the menus until the initial state.

DEGREES

This menu allows you to set the unit of measurement for the temperature. The value is preset to °C.

CONTROLS PROCEDURE

- Press key 6.
- Press key 3 until **SETTINGS** appears and confirm by pressing key 6.
- Press 3 until **DEGREES** appears and confirm by pressing 6.
- Use keys 4 -5 to select Celsius or Fahrenheit.
- Press key 6 to confirm and key 1 to scroll back through the menus until the initial state.

DO NOT USE ANY TYPE OF FLAMMABLE LIQUIDS FOR IGNITION!
DO NOT ALLOW THE BAG OF PELLETS TO COME INTO CONTACT WITH THE BOILING HOT STOVE DURING THE FILLING PHASE!
IN THE EVENT OF CONTINUED FAILURE TO LIGHT, CONTACT AN AUTHORISED TECHNICIAN.

IT IS FORBIDDEN TO USE THE DEVICE WITHOUT A PARTITION AND/OR FLAME GUARD (SEE FIGURE TO THE SIDE). REMOVAL WILL COMPROMISE THE SAFETY OF THE PRODUCT AND RESULT IN THE IMMEDIATE NULLIFICATION OF THE WARRANTY PERIOD. IN THE EVENT OF WEAR OR DETERIORATION, ASK THE AFTER-SALES SERVICE TO REPLACE THE PARTS (REPLACEMENT DOES NOT FALL WITHIN THE PRODUCT WARRANTY AS THE PART IS SUBJECT TO WEAR).

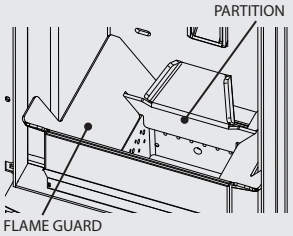

NO IGNITION

THE APPLIANCE MAY FAIL TO LIGHT BECAUSE THE AUGER IS EMPTY AND NOT ALWAYS ABLE TO LOAD THE BURN POT FAST ENOUGH WITH THE PELLETS NEEDED FOR NORMAL IGNITION. IF THE PROBLEM OCCURS AFTER ONLY A FEW MONTHS OF OPERATION, CHECK THAT THE ROUTINE CLEANING DESCRIBED IN THE STOVE HANDBOOK HAS BEEN CARRIED OUT CORRECTLY

OPERATION AND LOGIC

IGNITION
Once the points listed previously have been checked, press key 1 for three seconds to ignite the stove. 15 minutes are available for the ignition phase. After ignition and having reached the control temperature, the stove interrupts the ignition phase and passes to STARTING.

PREPARATION
During the start-up phase, the stove stabilises combustion, increasing it progressively, to then start ventilation and pass on to WORK.

WORK
During the work phase, the stove reaches the set power set; see following item.

SET POWER
Set the operating power from 1 to 5 (using keys 2 and 3).
Power 1 = minimum level - Power 5 = maximum level.

SET H2O
Set the boiler temperature from 65 to 80°C (using keys 4 and 5).

PUMP OPERATION
The pump is activated when the internal water temperature reaches 60°C. Since the pump is always in operation above 60°C, it is advisable to keep a heating area always open so that the product operates in a more homogeneous manner and in order to prevent stoppages due to overtemperature. This area is usually called "safety area"

CLEANING
At preset intervals, the generator cleans the burn pot, turning the machine off.
When the cleaning phase is finished, the generator will re-start automatically and continue the working phase, returning to the selected power level.

MODULATION and H-OFF
As the water temperature approaches the set point, the boiler starts to modulate automatically bringing itself to the minimum power. If the temperature increases beyond the set point, it will automatically switch off indicating **H-OFF,** and will automatically go back on when the temperature drops below the set point.

SWITCH-OFF
Press key 1 for three seconds.
Once this operation has been performed, the appliance automatically enters the switch-off phase, blocking the supply of pellets.
The flue gas exhaust motor and the hot air flow motor will remain on until the stove temperature has dropped below the default parameters.

REIGNITION
The stove can only be re-ignited automatically or manually when the cooling cycle conditions and the preset timer have been satisfied.

STAND-BY - ADDITIONAL THERMOSTAT

N.B. : INSTALLATION MUST BE PERFORMED BY AN AUTHORISED TECHNICIAN

It is possible to control the temperature of a room adjacent to the room where the stove is positioned; simply connect a thermostat following the procedure described in the following section (it is advisable to place the optional mechanical thermostat at a height off the ground equal to 1.50 m). Stove operation with the external thermostat connected in the clamp TA can be different depending on the activation or deactivation of the STAND BY function.
By factory default, the clamp TA **is jumpered, therefore it always has closed contact (on request).**

ADDITIONAL THERMOSTAT FUNCTIONING WITH STAND BY ACTIVE

When the STAND BY function is active, the STBY icon will be on. When the contact or external thermostat is not satisfied (open contact / temperature reached), the stove will switch off. As soon as the contact or external thermostat switches to the "not satisfied" status (closed contact / temperature to be reached) it will re-ignite.
NB: stove operation depends on the temperature of the water inside the stove and relative factory setting restrictions. If the stove is in H-OFF (water temperature reached), any additional contact or thermostat request will be ignored.

ADDITIONAL THERMOSTAT OPERATION WITH STAND BY DEACTIVATED

When the STAND BY function is not active, the STBY icon will be off.
When the contact or external thermostat is satisfied (open contact / temperature reached), the stove will go to minimum. As soon as the contact or external thermostat switches to the "not satisfied" status (closed contact / temperature to be reached) the stove will start to work again at the pre-set power.
NB: stove operation depends on the temperature of the water inside the stove and relative factory setting restrictions. If the stove is in H-OFF (water temperature reached), any additional contact or thermostat request will be ignored.

ADDITIONAL THERMOSTAT INSTALLATION

- A mechanical or digital thermostat with a "normally open" input is required.
- Remove the plug from the socket.
- Using the figure as a reference, connect the two thermostat cables (clean contact - no 230 V!).
- Connect the power to the stove again.

TO ACTIVATE STAND BY, REFER TO THE "SETTINGS" CHAPTER

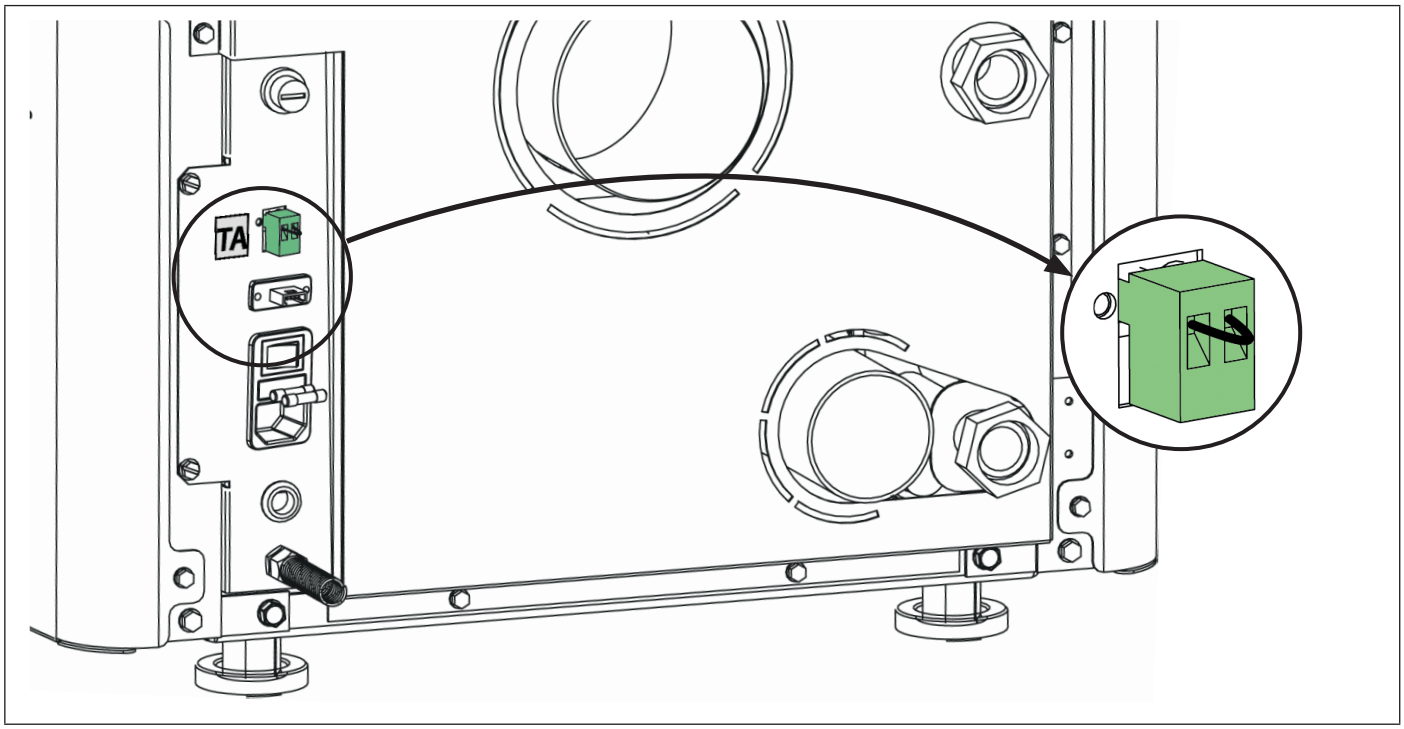

VENTILATION

The menu allows you to enable and adjust the speed (-2, -1, 0, +1, +2) of the front fan.
To guarantee efficient combustion, front air is excluded when the appliance is running at minimum power.

ENABLING CONTROLS PROCEDURE
- Press key 6.
- Press 3 until **VENTILATION** appears and confirm by pressing 6.
- Confirm **ENABLING** by pressing 6.
- Use keys 4 -5 to enable (**ON**) or disable (**OFF**) and confirm by pressing 6.
- Press 1 to return to the previous menus to the initial state.

SPEED ADJUSTMENT CONTROLS PROCEDURE
- Press key 6.
- Press 3 until **VENTILATION** appears and confirm by pressing 6.
- Keep pressing key 3 until **SPEED** appears and confirm by pressing key 6.
- Use keys 4 -5 to adjust the speed (-2, -1, 0, +1, +2) and confirm by pressing 6.
- Press 1 to return to the previous menus to the initial state.

SET THERMOSTAT CONTROLS PROCEDURE
- Press key 6.
- Press 3 until **VENTILATION** appears and confirm by pressing key 6.
- Keep pressing 3 until **SET THERMOSTAT** appears and confirm by pressing 6.
- Use keys 4 5 to adjust the room temperature (7°C - 37°C) and confirm by pressing 6.
- Press 1 to return to the previous menus to the initial state.

EASY SETUP

The volumetric weight of the pellet is the ratio between the weight and the volume of the pellet. This ratio may change without altering pellet quality. By using the EASY SETUP function, it is possible to dose the pellets by increasing or decreasing the preset values.
In the stove program, the available values range from "– 3" to "+ 3"; all stoves are calibrated during production with the optimal value, which is 0.

If you notice an excessive deposit in the burn pot, access the EASY SETUP program and lower the value by one unit to "- 1"; then wait until the next day and if there is no improvement, decrease again, to a maximum of "- 3".
If, on the other hand, it is necessary to increase the pellet dosage, switch the factory value from "0" to "+ 1, + 2, + 3" as required.

EXCESSIVE PELLET DEPOSIT IN BURN POT			NORMAL OPERATION	MINIMUM PELLET DEPOSIT IN BURN POT		
-3	-2	-1	0	+1	+2	+3
THIRD DECREASE RANGE IF THE FIRST TWO ARE INSUFFICIENT	SECOND DECREASE RANGE IF THE FIRST IS INSUFFICIENT	FIRST DECREASE RANGE (TEST FOR 1 DAY)	OPTIMAL FACTORY VALUE	FIRST INCREASE RANGE	SECOND INCREASE RANGE IF THE FIRST IS INSUFFICIENT	THIRD INCREASE RANGE IF THE FIRST TWO ARE INSUFFICIENT

CONTROLS PROCEDURE
- Press key 6.
- Press key 3 until **EASY SETUP** appears and confirm by pressing key 6.
- Use keys 4 -5 to set the range.
- Press key 6 to confirm and key 1 to scroll back through the menus until the initial state.

N.B.: IF THESE ADJUSTMENTS DO NOT SOLVE THE PROBLEM OF PELLET DEPOSITS IN THE BURN POT, PLEASE CONTACT YOUR LOCAL SERVICE CENTRE.

CHRONO

This function allows stove ignition and switch-off to be automatically programmed.
The factory setting for CHRONO is off.
The chrono allows the programming of 4 time slots per day, which can be used every day of the week.
For each time slot, it is possible to set ignition and switch-off times, specific days of application, desired temperature and set power.
Current day and time settings are essential for the correct operation of the Chrono.

Recommendations
Before using the chrono function, you must set the current day and time, so check that you have followed the points listed in the sub-chapter "DATE-TIME". To use the chrono function correctly, it must not only be programmed, but also enabled. The 4 time slots can be overlapped using the ignition and switch-off time settings. In this way, it is possible to create a combination of time slots with different temperatures and power levels, without changing the status of the stove.

N.B.: IN THE CASE OF OVERLAPPING TIME SLOTS, THE STOVE WILL REMAIN ON UNTIL THE LAST SWITCH-OFF TIME.

ENABLE CHRONO

Allows for the chrono and the various time bands to be enabled/disabled.
If the box is full, it means that the program is active.

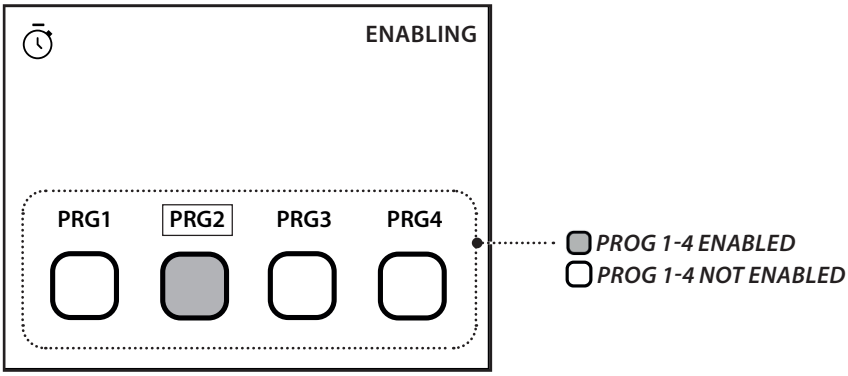

WEEKLY PROGRAM SETTING

This is used to set the ignition and switch-off times for one or more days of the week simultaneously, the **SET TEMPERATURE H2O** and the **SET POWER**.
The days of the week that have already been programmed are shown in the program and can be clearly identified, even when entering a new setting.
Press key 6 to confirm and key 1 to scroll back through the menus until the initial state.

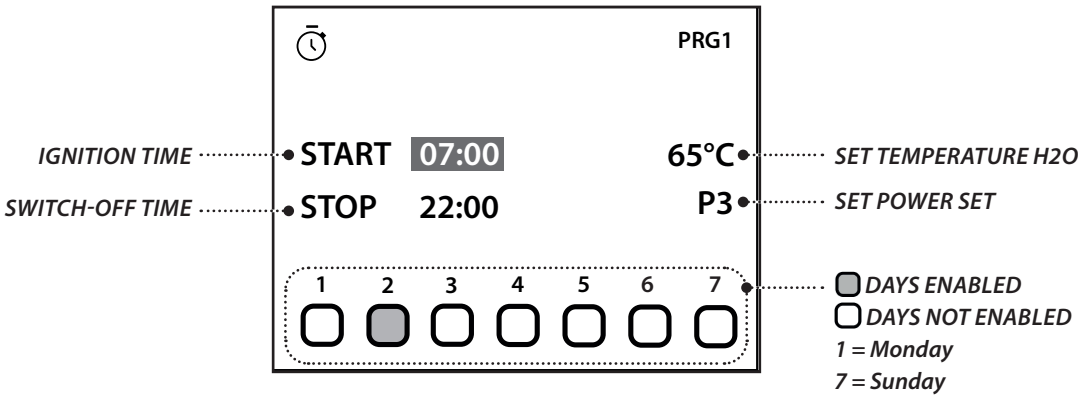

WHEN THE WEEKLY PROGRAMMER IS ACTIVE, THE CORRESPONDING ICON APPEARS IN THE CONTROL PANEL.

EXAMPLE OF CHRONO OVERLAPPING TIMES/SLOTS

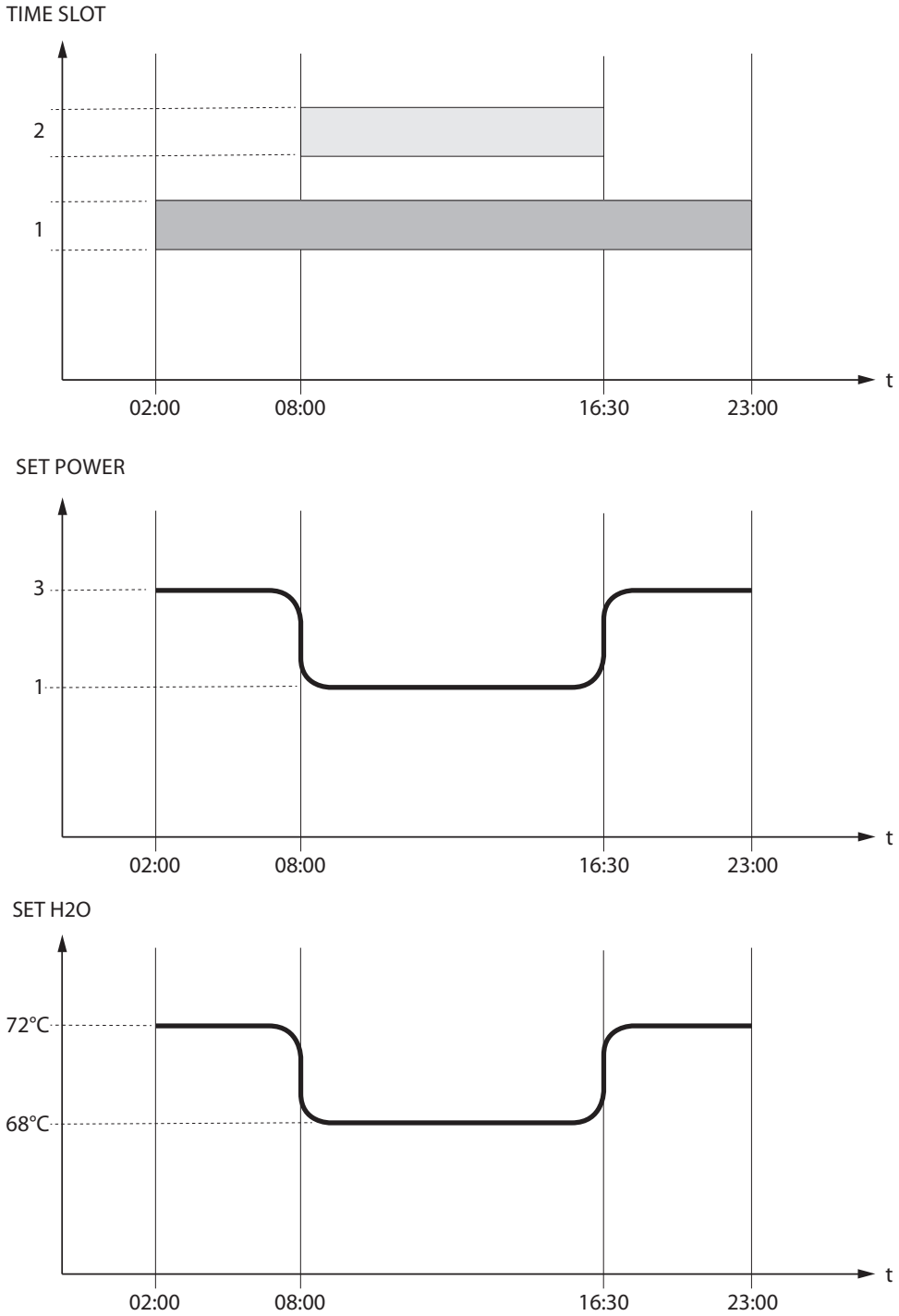

	Time slot 1	start 02:00 stop 23:00	power 3 - SET H2O 72°C
	Time slot 2	start 08:00 stop 16:30	power 1 - SET H2O 68°C
	stove operation		

SETTINGS

- **DATE-TIME**
- **LANGUAGE**
- **SET DEGREES**

SEE CHAPTER: FIRST IGNITION SETTINGS

DISPLAY

This menu allows you to adjust the brightness of the display. The values range from OFF, 1 to 20. If set to OFF, the display backlighting is set to maximum brightness and turns off after a 60 second delay.
The backlighting can be turned on again by pressing any key or if the stove is in the alarm condition.

CONTROLS PROCEDURE
- Press key 6.
- Press key 3 until **SETTINGS** appears and confirm by pressing key 6.
- Keep pressing key 3 until **DISPLAY** appears and confirm by pressing key 6.
- Use keys 4 -5 to set the desired intensity (**SET**)
- Press key 6 to confirm and key 1 to scroll back through the menus until the initial state.

STAND BY

The **STAND BY** function, if enabled, is used when stove switch-off is to be controlled by means of an additional thermostat

CONTROLS PROCEDURE
- Press key 6.
- Press key 3 until **SETTINGS** appears and confirm by pressing key 6.
- Keep pressing key 3 until **STAND BY** appears and confirm by pressing key 6.
- Use keys 4-5 to enable (**ON**) / disable (**OFF**).
- Press 1 several times to confirm and exit the menu

FIRST LOAD

This function allows the auger to be filled, thus facilitating first stove ignition phases, or in the event the pellet hopper is empty.
With the stove cold and "OFF", make sure the pellets have been introduced inside the hopper and activate the **FIRST LOAD** function, confirming by pressing OK.
To interrupt continuous loading, simply press key 1 for 3 seconds.

CONTROLS PROCEDURE
- Press key 6.
- press key 3 until **SETTINGS** appears and confirm by pressing key 6.
- Keep pressing key 3 until **FIRST LOAD** appears and confirm by pressing key 6.
- Press key 1 several times to confirm and exit the menu.

OUTLET AIR

This function allows any air in the stove to be discharged. By activating the pump function, it will be powered alternatively with 30 second work phases and 30 second stop phases for 15 minutes. With the stove cold and in "OFF", activate the **OUTLET AIR** function, pressing key 6 to confirm. To interrupt, press and hold key 1 for 3 seconds.
Warning: before activating the "**OUTLET AIR**" function, be sure to have opened the vent screw of the manual relief valve.

CONTROLS PROCEDURE
- Press key 6.
- Press key 3 until **SETTINGS** appears and confirm by pressing key 6.
- Keep pressing 3 until **OUTLET AIR** appears and confirm by pressing 6.
- Press key 1 several times to confirm and exit the menu.

CLEANING

This function allows to open the burn pot base, facilitating the combustion chamber cleaning operations, with the smoke fan active.
With the stove cold and switched "OFF", activate the **CLEANING** function.
Keep the fire door closed until the message "**CLEANING - DO THE CLEANING**" is displayed.
Once the burn pot bottom has been opened completely, open the fire door and, using the special tool supplied, clean the burn pot, scrape the walls of the combustion chamber and let the residual ash drop into the ash drawer, then empty it out.
When cleaning is complete, close the door and end the function.

CONTROLS PROCEDURE:
- Press key 6
- Press key 3 until **SETTINGS** appears and confirm by pressing 6.
- Keep pressing 3 until **CLEANING** appears and confirm by pressing 6.
- Scrape the walls of the combustion chamber using the special tool supplied and let the residual ash drop into the ash drawer.
- Press key 1 to end and wait for the main screen to reappear.

OPEN THE DOOR ONLY DURING THE CLEANING PHASE! THE DISPLAY WILL SIGNAL THE OPENING OF THE DOOR DURING THE BURN POT MOVEMENT PHASES AND IT WILL BE BLOCKED!

WI-FI

The display allows internet connection using Wi-Fi technology.
The entire Wi-Fi interface is grouped under the Settings -> W-Fi menu
The configuration must be made using the Total Control 3.0 App, which can be downloaded from Play Store or Apple Store.
https://www.lanordica-extraflame.com

- **RESET**

The setting allows you to reset the Wi-Fi to factory settings

CONTROLS PROCEDURE
- Press key 6.
- Press key 3 until **SETTINGS** appears and confirm by pressing key 6.
- Press key 3 until **Wi-Fi** appears and confirm by pressing key 6.
- Press key 3 until **RESET** appears and the press key 6.
- Use keys 4-5 to select start reset "ON" / "OFF" and press key 6 to confirm.
- Press key 1 several times to exit the menu.

- **WPS**

The setting allows for the WiFi module to be connected to the home router without having to enter the password. However, for correct operation, it is necessary to register the product via the Total Control 3.0 App.
Once the WPS is activated, the WiFi module will wait to receive the WiFi configuration directly from the home router. The router, which must be set up for this feature, usually has a WPS button to press.

CONTROLS PROCEDURE
- Press key 6.
- Press key 3 until **SETTINGS** appears and confirm by pressing key 6.
- Keep pressing 3 until **WI-FI** appears and confirm by pressing 6.
- Press key 3 until **WPS** appears and then press key 6.
- Use keys 4-5 to select start reset "ON" / "OFF" and press key 6 to confirm.
- Press key 1 several times to exit the menu.

- **INFO**

Three pieces of information about the Wi-Fi function are available in this menu.
To set: OK > *SETTINGS* > *WIFI* > *INFO*

CONTROLS PROCEDURE
- Press key 6.
- Press key 3 until **SETTINGS** appears and confirm by pressing key 6.
- Keep pressing 3 until **WI-FI** appears and confirm by pressing 6.
- Press key 3 until **INFO** appears and then press key 6.

- **MAC**: Unique identification code of the Wi-Fi device
- **STATUS**: WiFi module status; it can have the following values:
  - SERIAL KO: no communication between WiFi module and stove board
  - DISCONNECTED: The WiFi module is not configured for internet access
  - STATION OK: The WiFi module is connected to the home router, but has no access to the cloud (e.g. no Internet access, firewall issues)
  - CLOUD OK: The WiFi module is connected to the cloud
  - BLUETOOTH: the Wi-Fi module is connected via Bluetooth

The firmware revision number of the WiFi module is also indicated.
- **VERSION**: the name of the firmware version of the WiFi module is indicated.
- **RSSI**: Wi-Fi signal strength, when it is correctly connected to an access point

The RSSI value is expressed in decibels (dB) as a negative number which is typically in the range between -60dB (excellent signal) and -85dB (very poor signal). If the signal is poor, we recommend purchasing a Wi-Fi repeater to avoid any connectivity problems

OPERATION AND SOLUTIONS

The "WI-FI" icon itself, visible on the main page of the display, indicates the operating status of the stove's Wi-Fi connection
Below is a table that explains how to interpret the information provided, and the actions to be taken

WIFI ICON STATUS		EXPLANATION	SOLUTION
	Icon not present	Module off	-
	Icon flashing	Connection in progress *The module is attempting to make the connection to the home network selected.*	The module may take up to one minute to make the connection. If the problem persists, run a reset and reconfigure the product
	Icon steadily lit	The Wi-Fi module is connected to the home router, but has no access to the cloud	-
	Icon flashing	The Wi-Fi module is connecting to the cloud	-
	Icon steadily lit	The WiFi module is connected to the cloud	-
	"Bluetooth" icon steadily lit:	the Wi-Fi module is connected via Bluetooth	-

RESET

Allows the user to reset all editable values to the default values.

CONTROLS PROCEDURE
- Press key 6.
- Press key 3 until **SETTINGS** appears and confirm by pressing key 6.
- Keep pressing 3 until **RESET** appears and confirm by pressing 6.
- Use keys 4-5 to enable "ON" / disable "OFF"
- Press key 1 several times to confirm and exit the menu.

EASY CONTROL

The function allows for two values to be set:
- **OFF** (disabled - factory default)
- **ON** (enabled)

Activation (EASY CONTROL = **ON**) is recommended if there is an excessive formation of combustion residues in the flue during operation at reduced power (see FLUE EXHAUST chapter).

Caution! It is advisable to activate the EASY CONTROL function under the supervision of a qualified technician.

CONTROLS PROCEDURE
- Press key 6.
- Press key 3 until **SETTINGS** appears and confirm by pressing key 6.
- Keep pressing 3 until **EASY CONTROL** appears and confirm by pressing 6.
- Use keys 4-5 to enable "**ON**" / disable "**OFF**"
- Press key 1 several times to confirm and exit the menu.

AUX

If the producer's conveyed wave accessories are used, the connection must be made by the qualified technician directly in the board. Contact the dealer for further details.

OPTIONAL ADDITIONAL DATA SHEET

The manufacturer has an optional additional data sheet which allows the boiler to have the following additional system management functions. The table below indicates the various possibilities that the optional can offer.

DHW Storage Management	✓
Buffer Tank management	✓
3 heating areas	✓
Instant DHW option	✓
Buffer tank pump or 4th heating area management	✓
Anti-legionella management for DHW storage	✓
DHW storage chrono management	✓
Auxiliary output management and control	✓

TO FIND OUT WHERE YOUR NEAREST SERVICE CENTRE IS, CONTACT YOUR DEALER OR GO TO THE WEBSITE: WWW.LANORDICA-EXTRAFLAME.COM

CLEANING AND MAINTENANCE

ALWAYS FOLLOW THE INSTRUCTIONS IN COMPLETE SAFETY!

- Make sure that the power cord is unplugged because the generator may have been programmed to switch on.
- That the generator is cold all over.
- That the ashes are completely cold.
- Ensure efficient air exchange in the room during the product cleaning operations.
- Poor cleaning will compromise correct operation and safety!

MAINTENANCE

For correct operation, the generator must undergo routine maintenance by a qualified technician, at least once a year.
The periodic inspection and maintenance operations must always be performed by specialised, qualified technicians, who operate in accordance with the laws in force and the instructions given in this use and maintenance manual.

FUMES FROM BLOCKED FLUES ARE DANGEROUS!!
KEEP THE CHIMNEY AND FLUE CLEAR AND CLEAN IN ACCORDANCE WITH THE INSTRUCTIONS.
EVERY YEAR, HAVE THE FUME EXTRACTION SYSTEM, FLUE PIPES AND T-FITTINGS, INCLUDING THE INSPECTION CAPS, CLEANED. IF PRESENT, ALSO CLEAN THE ELBOWS AND HORIZONTAL SECTIONS!
THE GENERATOR CLEANING FREQUENCY IS INDICATIVE! IT DEPENDS ON THE QUALITY OF THE PELLETS AND FREQUENCY OF USE.
THESE OPERATIONS MAY SOMETIMES NEED TO BE PERFORMED MORE OFTEN

PERIODIC CLEANING UNDER USER'S RESPONSIBILITY

The periodic cleaning operations, as indicated in this use and maintenance manual, must be performed with the utmost care after reading the instructions, procedures and frequency described in this use and maintenance manual.

CLEANING THE SURFACES AND COVERING
Never use abrasive or chemically aggressive detergents for cleaning!
The surfaces must be cleaned when the generator and coating are completely cold. For the maintenance of the surfaces and metal parts, simply use a cloth dampened with water or water and neutral soap.
Failure to comply with these instructions may damage the surfaces of the generator and cause the invalidation of the warranty.

CLEANING THE CERAMIC GLASS
Never use abrasive or chemically aggressive detergents for cleaning!
The ceramic glass must be cleaned when the glass is completely cold.
To clean the ceramic glass, simply use a dry brush and some damp newspaper dipped in ash. If the glass is very dirty, use a specific cleaning agent for ceramic glass. Spray a small amount on a cloth and use it on the ceramic glass. Do not spray the cleaning agent or any other liquid directly on the glass or seals!

Failure to comply with these instructions may damage the surfaces of the generator and cause the invalidation of the warranty

CLEANING THE PELLET HOPPER
When the hopper is completely empty, disconnect the generator power cord, remove any residue (dust, debris, etc.) from the empty hopper before filling it up.

SCRAPERS:

The heat exchangers must only be cleaned when cold! Its cleaning guarantees constant heat output over time. To do this, use the scrapers positioned in the upper part of the generator, making upward and downward moments several times.

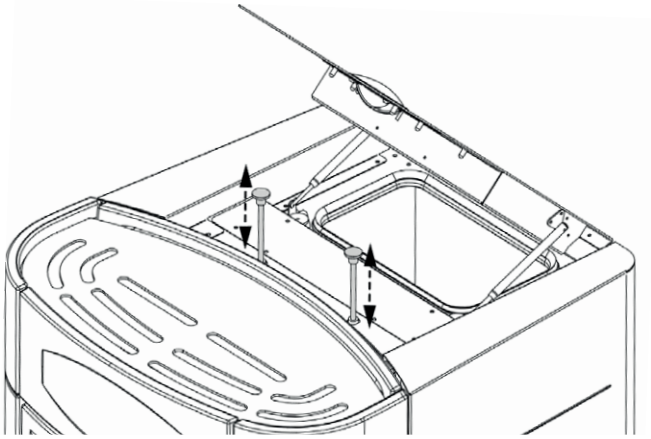

THE IMAGES ARE FOR ILLUSTRATIVE PURPOSES.

BURN POT AND COMBUSTION CHAMBER:

By means of a mechanical system, the burn pot is cleaned automatically at preset intervals. **It is however advisable to remove any residues by means of a vacuum cleaner.**

- Suck the ash deposited between the partition (A) and the fire door.
- Remove the conveyor (B).
- Clean the combustion ash chamber and the bottom of the burn pot completely, using a suitable vacuum cleaner.
- Refit the conveyor (B) on the burn pot.

To clean the burn pot, it is necessary to remove the conveyor (B); see picture.
To remove it, simply lift it off the burn pot.

After cleaning the burn pot, always make sure that the conveyor (B) rests on the burn pot correctly and not on another area of the combustion chamber.

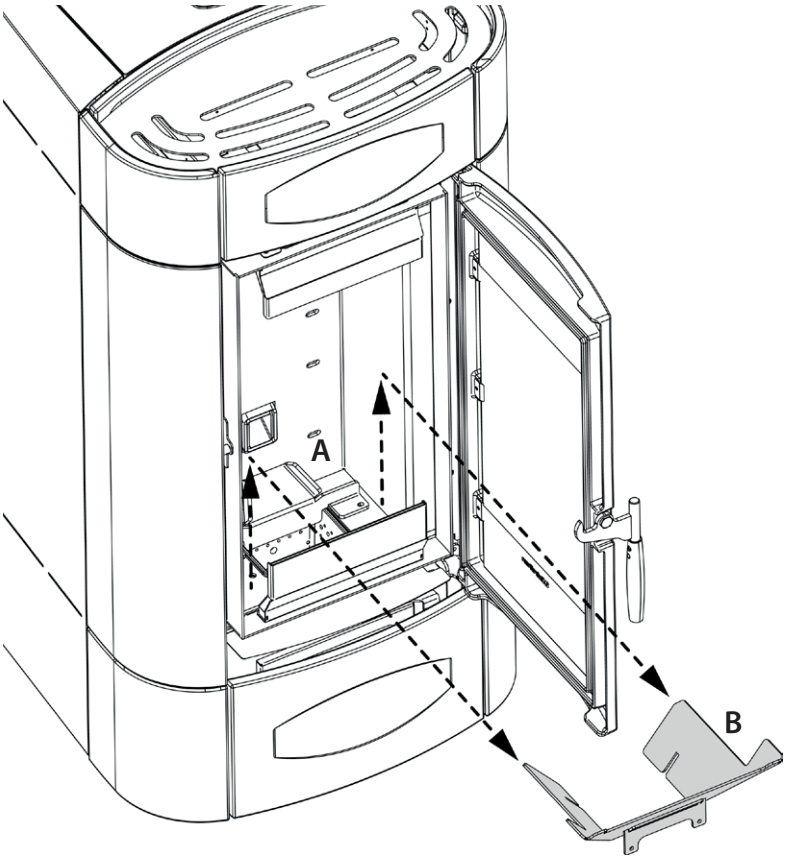

DETAILS ON BURN POT CLEANING

During thebrazier cleaning operations, make sure to remove the ashed behind the pellet chute.
Insert the supplied poker behind the pellet chute (A) removing ther deposits.
Then aspirate the ashes with an adequate vacuum cleaner.

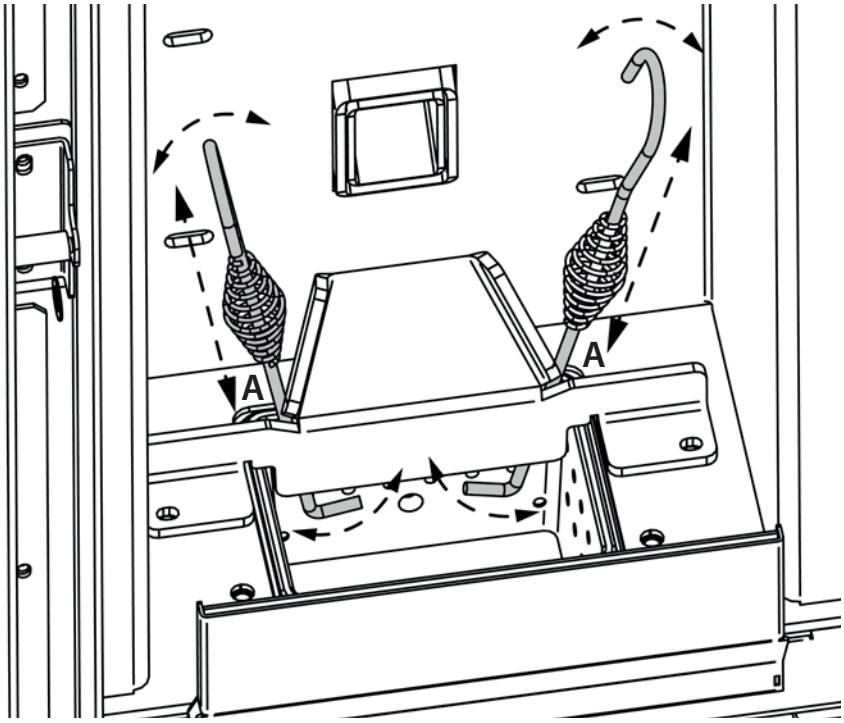

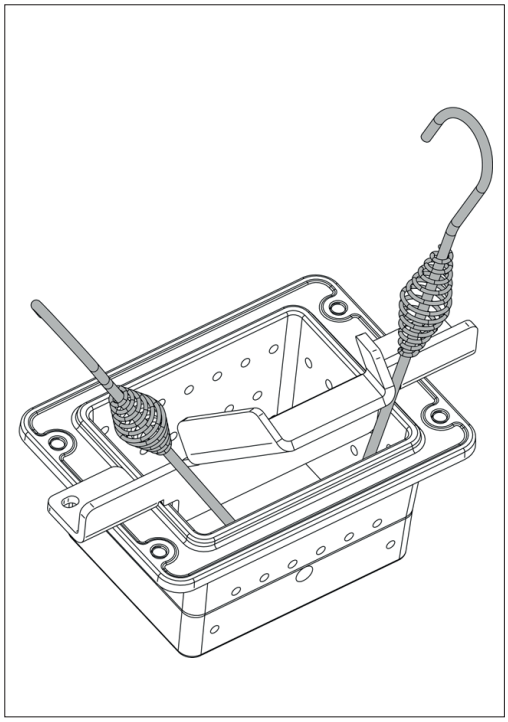

THE IMAGES ARE FOR ILLUSTRATIVE PURPOSES.

A CLEAN BURN POT GUARANTEES CORRECT OPERATION!
BY KEEPING THE BURN POT AND ITS HOLES CONSTANTLY CLEAN AND FREE OF COMBUSTION RESIDUE, EXCELLENT COMBUSTION IS GUARANTEED OVER TIME, THUS PREVENTING ANY GENERATOR MALFUNCTIONS THAT MAY REQUIRE TECHNICAL ASSISTANCE.
THE "EASY SETUP" FUNCTION IN THE USER MENU CAN BE USED TO ADAPT COMBUSTION ON THE BASIS OF THE NEEDS DESCRIBED.

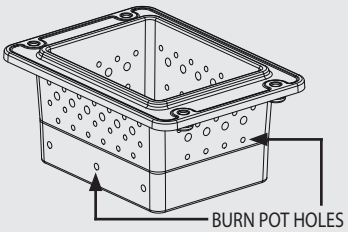

ASH DRAWER:

Remove the ash drawer and empty it into a suitable container.

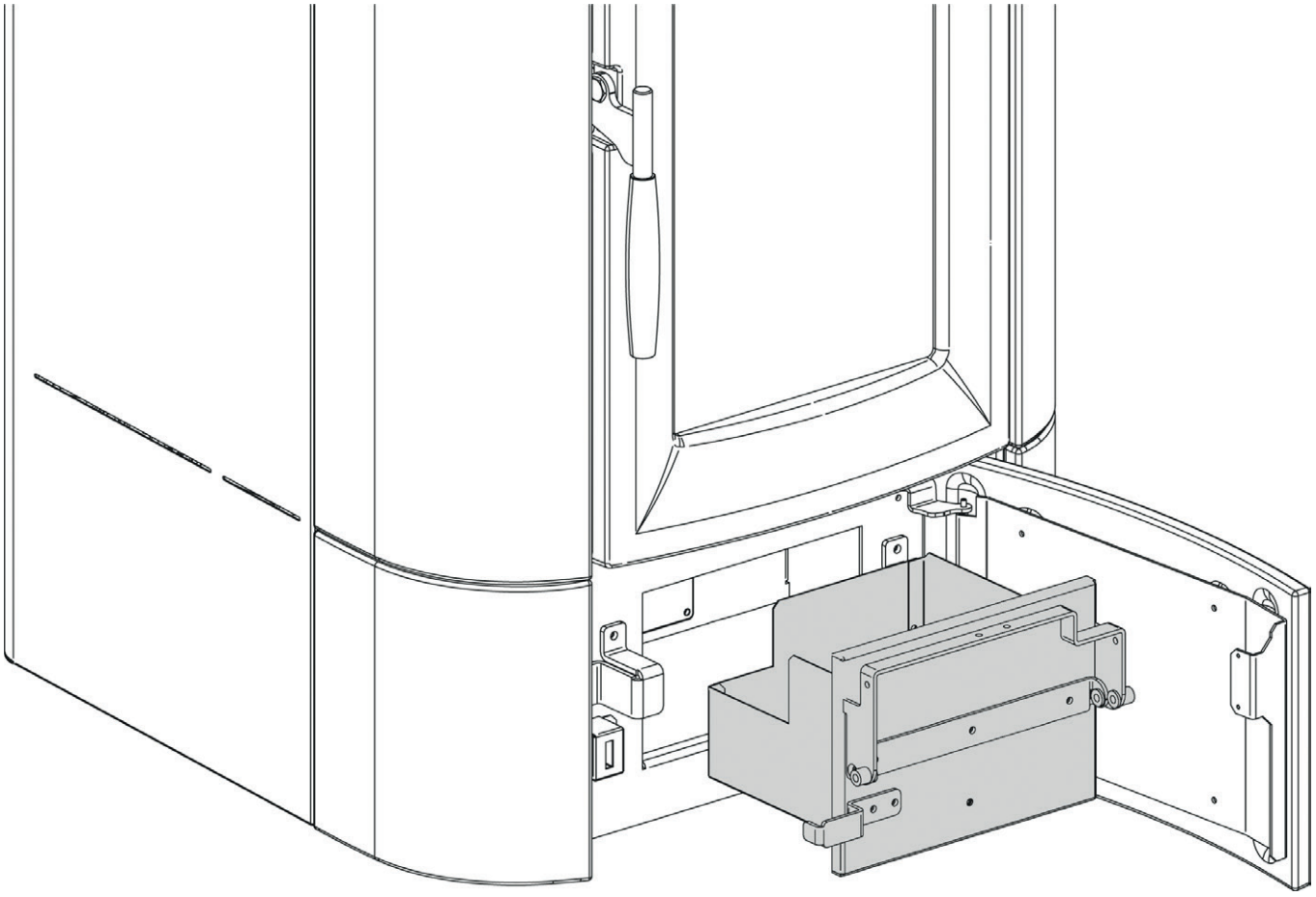

THE IMAGES ARE FOR ILLUSTRATIVE PURPOSES.

PARTIES	FREQUENCY IN DAYS*
SCRAPERS (USER)	7
BURN POT (USER)	7
COMBUSTION CHAMBER (USER)	7
ASH DRAWER** (USER)	7
T-SHAPED FITTING/ FLUE PIPE (QUALIFIED TECHNICIAN)	365

* 8h average use at maximum power.

* *How often the ash drawer is emptied depends on a number of factors: the type of pellets, the stove output, the use of the stove and the type of installation.

THE PELLET HOPPER GASKETS, BURN POT AND FIRE DOOR GUARANTEE CORRECT STOVE OPERATION. THEY MUST BE PERIODICALLY CHECKED BY THE USER. IF THEY ARE WORN OR DAMAGED, DO NOT USE THE STOVE UNTIL THEY HAVE BEEN REPLACED.
THESE OPERATIONS MUST BE PERFORMED BY A QUALIFIED TECHNICIAN.

IF THE POWER CORD IS DAMAGED, IT MUST BE REPLACED BY THE SERVICE CENTRE OR BY A SIMILARLY QUALIFIED PERSON, SO AS TO AVOID ALL RISKS.

TO FIND OUT WHERE YOUR NEAREST SERVICE CENTRE IS, CONTACT YOUR DEALER OR GO TO THE WEBSITE:
WWW.LANORDICA-EXTRAFLAME.COM

ROUTINE MAINTENANCE PERFORMED BY QUALIFIED TECHNICIANS

Routine maintenance must be performed at least once a year.
Since the generator uses pellets as solid fuel, it requires annual routine maintenance, which must be performed by a **Qualified technician, using only original spare parts.**
Failure to comply may jeopardise the safety of the appliance and invalidate the warranty conditions.
By observing the cleaning schedule reserved to the user described in the use and maintenance manual, the generator will be guaranteed correct combustion over time, thus preventing any faults and/or malfunctions which may require subsequent technical assistance. Requests for routine maintenance are not covered by the warranty.

GASKETS, PELLET HOPPER LID, DOOR, ASH DRAWER AND BURN POT, INSPECTION OF SMOKE DUCTS

The gaskets ensure the proper sealing of the stove and therefore its proper operation.
They must be periodically checked by the user. If they are worn or damaged, do not use the stove until they have been replaced.
These operations must be carried out by a qualified technician.

CONNECTION TO THE FLUE

Annually, or in any case each time the flue pipe needs to be vacuumed and cleaned. If there are horizontal sections, the residue must be removed to prevent it from obstructing the flow of fumes.

SHUT-DOWN (END OF SEASON)

At the end of each season, before turning the stove off, it is advisable to completely empty the pellet hopper, removing any pellet residue and dust with a vacuum cleaner.
Routine maintenance must be performed at least once a year.

THE IMAGES ARE FOR ILLUSTRATIVE PURPOSES.

TO FIND OUT WHERE YOUR NEAREST SERVICE CENTRE IS, CONTACT YOUR DEALER OR VISIT THE WEBSITE:
WWW.LANORDICA-EXTRAFLAME.COM

THE IMAGES ARE FOR ILLUSTRATIVE PURPOSES.

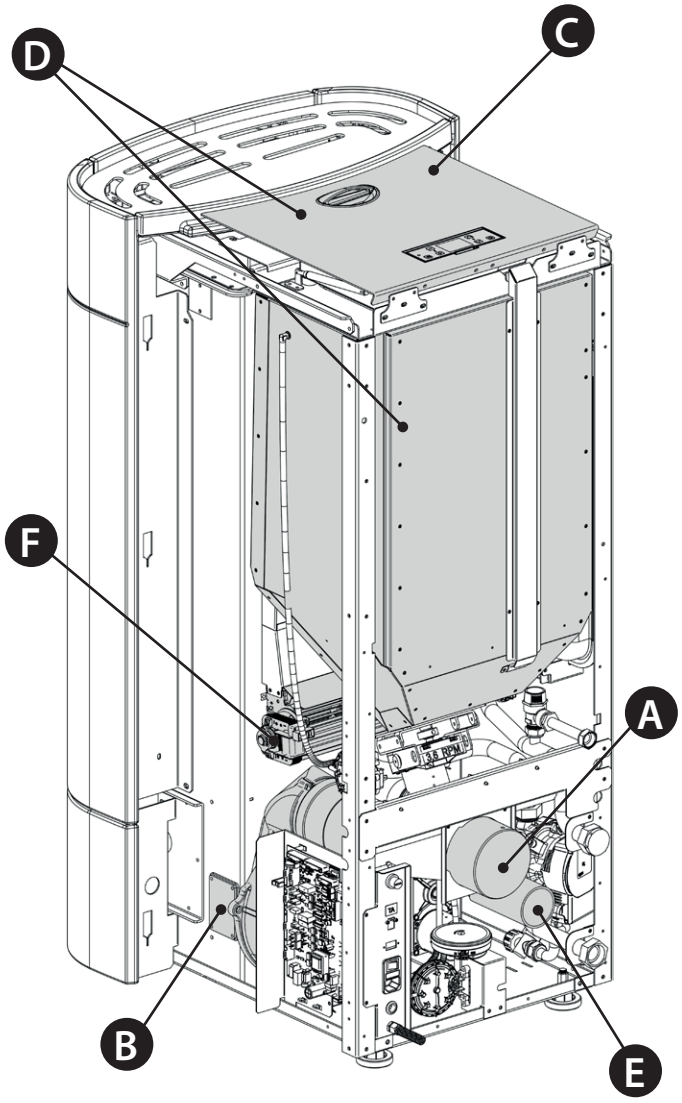

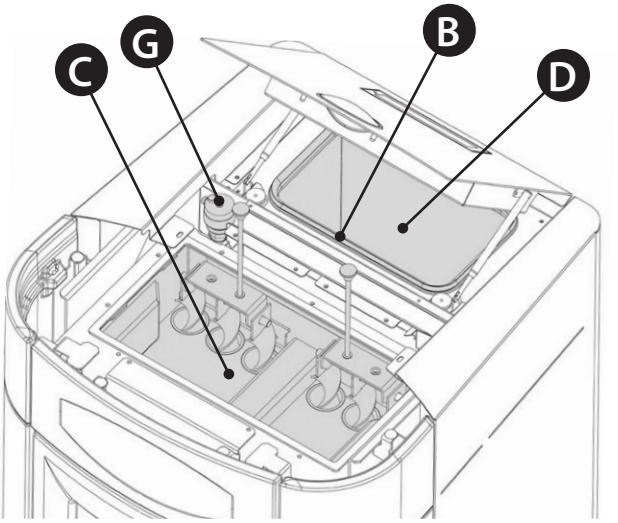

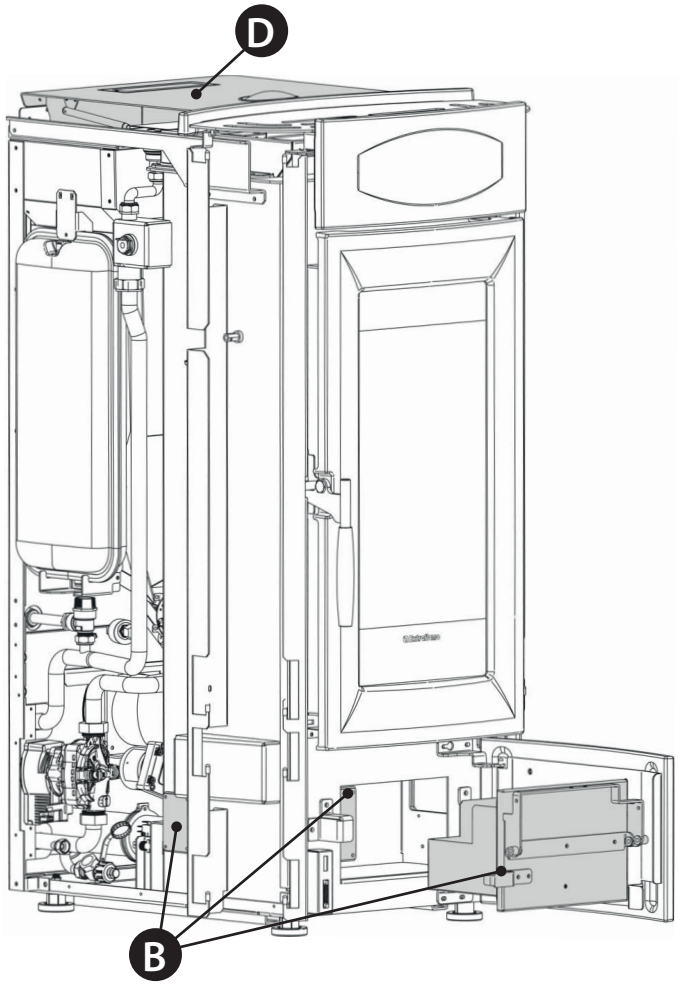

A	Fumes motor (disassembly and cleaning and fumes pipe and "T"), new silicone in the provided points
B	Gaskets, pellet hopper, inspections, ash drawer and door (replace and apply silicone where indicated)
C	Combustion chamber and heat exchanger (full cleaning) including ignition plug pipe
D	Hopper (complete emptying and cleaning).
E	Check air intake pipe and cleaning of the flow sensor
F	Remove the ambient air fan and remove any dust and pellet residue.
G	Manual purge valve

DISPLAYS	
DISPLAY	**REASON**
OFF	Generator off
START	The start-up phase is in progress
PELLET LOADING	Continuous pellet feeding is in progress during the ignition phase
IGNITION	The ignition phase is in progress
PREPARATION	The **PREPARATION** phase is in progress
WORK	The normal work phase is in progress
MODULATION	The generator is working at minimum
****BURN POT CLEANING**	Automatic burn pot cleaning is in progress
FINAL CLEANING	The final cleaning is in progress
STAND BY	Generator off waiting for re-ignition due to an external thermostat
COOLING - STAND BY	A new ignition is attempted when the generator has just been switched off. When the generator switches off, one must wait for the complete shutdown of the fumes motor, then clean the burn pot. The generator can only be re-ignited when these operations have been performed.
H-OFF	Generator off due to water temperature over set.
****T-AMB**	Displays the room temperature (in models with this function).
***T - OFF**	Generator off waiting for re-ignition due to all requests met
BLACK OUT STAND BY	The generator is cooling after a power cut. Once cooling is completed, it will re-start automatically
ANTI-FREEZING	The anti-freezing function is in progress as the H2O temperature is below the factory set threshold the pump is active until the water reaches the pre-set factory parameter +2°C
ANTI-BLOCK	The pump anti-block function is in progress (only if the generator has been in an OFF state for at least 96 hours); the pump is activated for the time pre-set by the manufacturer, in order to prevent it from blocking
****AUTO BLOW**	The automatic blow is active. During the working phase, the stove has an internal timer, which after a pre-set period of time cleans the burn pot. This phase is shown on the display, it lowers the stove power level and increases the flue gas exhaust motor for a programmed period of time. When the cleaning phase is finished, the stove will re-start automatically and continue the working phase, returning to the selected power level.
CLOSE STOVE DOOR	This indication means that you have 60 seconds to close the hatch/door and the pellet lid. Once 60 seconds have passed, during ignition the stove will go into "**DEPR ALARM**" mode, while during normal operation the stove will go into "**COOLING STAND BY**" mode before automatically resuming operation once the conditions are satisfied (cold stove, etc.).
CLOSE HOPPER	
****DEACT.BULB THERM.**	Contact after-sales centre
****MIN DELTA-P**	The appliance detects abnormal conditions in the combustion air or flue gas outlet flows.

* if there is an additional system data sheet

** on models with this function.

ALARMS

DISPLAY	EXPLANATION	SOLUTION
⚠	Indicates the presence of an alarm.	On: indicates the presence of an alarm Flashing: indicates the deactivation of the depression sensor. The alarm can be reset only if the fumes motor has stopped and 15 minutes have passed since the alarm was displayed, by pressing the key ON/OFF ⏻ for 3 seconds.
FUMES MOTOR FAULT	Fumes motor fault	Contact after-sales centre
FUMES PROBE	Fumes probe fault.	Contact after-sales centre
HOT FUMES	High fumes temperature	Check pellet feed (see "Pellet feed adjustment"). If the problem cannot be solved, contact an authorised technician.
****CHAMB PROBE**	Chamber probe fault.	Contact the after-sales centre.
NO IGNITION	The pellet hopper is empty. Pellet feed calibration inadequate. Thermostat bulbs tripped.	Check for the presence of pellets in the hopper. Adjust the pellet flow (see "Pellet load adjustment"). Check the procedures described in the "Ignition" chapter. Check bulb thermostats (see chapter on Resetting)
NO IGNITION BLACK OUT	No power during the ignition phase.	Turn the stove off using key 1 and repeat the procedure described in the "**IGNITION**" chapter. Other reset operations should be performed by an authorised technician.
NO FLAME	The pellet hopper is empty. No pellet feed. The gearmotor does not feed pellets.	Check for the presence of pellets in the hopper. Check bulb thermostats (see chapter on Resetting) Adjust the pellet flow (see "Pellet feed adjustment").
DEPR ALARM	The door is not closed correctly. The ash drawer is not closed correctly (if present)	Check hermetic door closure. Check hermetic closure of the ash drawer (if present).
****MIN DELTA-P ALARM 1**	The combustion chamber is dirty. The fumes exhaust pipe is blocked/dirty. The vacuum detection channel inside the ash drawers is clogged. The pellet hopper is open.	Check cleanliness of the fumes pipe and the combustion chamber. Check and clean the hose connection and the ash drawer pressure switch tube. Contact after-sales centre Check that the hopper is properly closed and the condition of the sealing gaskets.
H2O PROBE	H2O probe fault	Contact after-sales centre
MIN H2O PRESSURE ALARM	The system pressure read by the pressure switch is too low.	Possible air in the system; bleed the system. Possible lack of water or leaks due to anomalies in some system component. If the problem persists, contact the service centre.
MAX H2O PRESSURE ALARM	The pressure of the water has exceeded the max threshold	Possible air in the system; bleed the system. Check that the expansion vessels are not damaged or under-dimensioned Check that the cold system is loaded at the correct pressure If the problem persists, contact the service centre.
AUGER CONTROL ALARM	Abnormal pellet feeding.	Contact after-sales centre
****AUGER BLOCKED**	Abnormal operation of pellet motor.	Contact after-sales centre

* if there is an additional system data sheet

** on models with this function.

****TRAPDOOR BLOCKED**	The automatic cleaning of the burn pot is blocked. Burn pot dirty/clogged The door is not closed correctly.	Check that the door closes correctly. Check that the burn pot is clear and clean. The automatic cleaning of the burn pot is blocked. If the problem persists, contact the service centre.
****MAX ELECTRICAL CURRENT**	The automatic cleaning of the burn pot is blocked. Burn pot dirty/clogged The door is not closed correctly.	Check that the door closes correctly. Check that the burn pot is clear and clean. The automatic cleaning of the burn pot is blocked. If the problem persists, contact the service centre.
***DHW PROBE**	Fault in **DHW PROBE** probe.	Contact after-sales centre
***BUFFER TANK PROBE**	Fault in **BUFFER TANK** probe.	Contact after-sales centre
PWM INTERFACE ALARM	IPWM output interface damaged, in short circuit or not connected	Contact after-sales centre
HOT PWM ALARM	The pump is operating but not with good performance. Undervoltage 160-194v. Pump in circuit breaker protection mode.	Contact after-sales centre
STOPPED PWM ALARM	The pump has stopped but is still operational. Undervoltage < 160v. Overvoltage. Unexpected external flow.	Contact after-sales centre
STOPPED 2 PWM ALARM	The pump has stopped but is still operational. Problem in a component different to the pump. Debris in installation. Positioning in high temperature.	Contact after-sales centre
BLOCKED PWM ALARM	The pump has stopped permanently Pump blocked. Electronic module damaged	Contact after-sales centre
FLOW PWM ALARM	Pump blocked. Liquid with high density. Pipe obstructed.	Contact after-sales centre
****DELTA-P FAULT**	Differential pressure transducer faulty or disconnected.	Contact after-sales centre
MIN DELTA-P ALARM 2	The ash drawer is not closed correctly. The air intake is clogged. The combustion chamber is dirty. The holes in the burn pot are clogged. The heat exchanger and/or the fume pipe of the appliance are dirty. The T-shaped fitting, the flue pipe or the chimney flue are clogged.	Check hermetic closure of the ash drawer. Clean the air intake. Clean the combustion chamber. Clear the burn pot holes. Clean the heat exchanger and the fume pipe of the appliance. Clean/clear the T-shaped fitting, the flue pipe and the chimney flue. Contact after-sales centre

* if there is an additional system data sheet

** on models with this function.

DISPOSAL

INFORMATION FOR MANAGEMENT OF ELECTRIC AND ELECTRONIC APPLIANCE WASTE CONTAINING BATTERIES OR ACCUMULATORS

This symbol, which is used on the product, batteries, accumulators or on the packaging or documents, means that at the end of its useful life, this product, the batteries and the accumulators included must not be collected, recycled or disposed of together with domestic waste.
Improper management of electric or electronic waste or batteries or accumulators can lead to the leakage of hazardous substances contained in the product. For the purpose of preventing damage to health or the environment, users are kindly asked to separate this equipment and/or batteries or accumulators included from other types of waste and to arrange for disposal by the municipal waste service It is possible to ask your local dealer to collect the waste electric or electronic appliance under the conditions and following the methods provided by national laws transposing the Directive 2012/19/EU.

Separate waste collection and recycling of unused electric and electronic equipment, batteries and accumulators helps to save natural resources and to guarantee that this waste is processed in a manner that is safe for health and the environment.
For more information about how to collect electric and electronic equipment and appliances, batteries and accumulators, please contact your local Council or Public Authority competent to issue the relevant permits.

EN 16510-1 Symbol	EXPLANATION
nom	Nominal heat output
part	Part load heat output
CON / INT	Appliance operation, Continuos (CON) or Intermittent (INT)
$CO_{2\,nom} / CO_{2\,part}$	Carbon dioxide emission
CO_{nom} / CO_{part}	Carbon monoxide emission
d_B	Minimum distances to combustible materials - bottom
d_C	Minimum distances to combustible materials - ceiling
d_F	Minimum distances to combustible materials - floor in front
d_L	Minimum distances to combustible materials - side radiation area
d_{non}	Minimum distances to non-combustible walls
d_{out}	Flue gas exhaust pipe
d_P	Minimum distances to adjacent combustible materials - front
d_R	Minimum distances to combustible materials - rear
d_S	Minimum distances to combustible materials - side
E, f	Power supply voltage, frequency
EEI	Energy Efficiency Index
el_{max}	Consumption of electrical auxiliary energy at nominal heat output
el_{min}	Consumption of electrical auxiliary energy at part load heat output
el_{SB}	Consumption of electrical auxiliary energy at standby
H	Appliance height
L	Appliance depth
m	Net weight
m_{chim}	Maximum load of a chimney the appliance max carry
$m_{h\,nom} / m_{h\,part}$	Hourly consumption
$NO_{x\,nom} / NO_{x\,par}$	Nitrogen oxides emission
OGC_{nom} / OCG_{part}	Emission of organic gaseous carbon
PM_{nom} / PM_{part}	Particulate matter emissions
P_{nom} / P_{part}	Heat output
p_{nom} / p_{part}	Minimum flue draught
$P_{SH\,nom} / P_{SH\,part}$	Space heat output
p_W	Permissible maximum water operating pressure
$P_{W\,nom} / P_{W\,part}$	Water heat output
s	Thickness of the protective insulation material
T_{class}	Chimney designation
$T_{f.g\,nom} / T_{f.g\,part}$	Mean flue gas temperature
$T_{s\,nom} / T_{s\,part}$	Flue gas outlet temperature
W	Appliance width
W_{max}	Maximum electric power input
η_{nom} / η_{part}	Efficiency
η_S	Seasonal space heating efficiency at nominal heat output
$\Phi_{f.g\,nom} / \Phi_{f.g\,part}$	Flue gas mass flow
Wood Pellet (L)	Wood Pellet
Wood Logs (l)	Wood Logs
	Read and follow the user operating instructions

Extraflame®

Riscaldamento a Pellet

EXTRAFLAME S.p.A. Via Dell'Artigianato, 12 36030 - MONTECCHIO PRECALCINO (VI) - ITALY
☏ +39.0445.865911 - 🖷 +39.0445.865912 - ✉ info@extraflame.it - 💻 www.lanordica-extraflame.com

MADE IN ITALY
design & production

TO FIND THE SERVICE CENTRE NEAREST TO YOU CONTACT YOUR DEALER OR CONSULT THE SITE WWW.LANORDICA-EXTRAFLAME.COM

The manufacturer reserves the right to vary the characteristics and the data reported in this pamphlet at any moment and without notice, in order to improve its products.