Extraflame®

Riscaldamento a Pellet

UK

# PELLET STOVES USER MANUAL

MADE IN ITALY
design & production

# SABRY AD

004331717 - Rev 000

APPLY TECHNICAL
DATA LABEL

# ATTENTION

**SURFACES CAN BECOME VERY HOT!**
**ALWAYS USE PROTECTIVE GLOVES!**

***During combustion, thermal energy is released that significantly increases the heat of surfaces, doors, handles, controls, glass, exhaust pipes, and even the front of the appliance. Avoid contact with those elements if not wearing protective clothing (protective gloves included). Make sure children are aware of the danger and keep them away from the stove during operation.***


**ENGLISH** ..... **4**

**WARNINGS** ..... **4**
**SAFETY** ..... **4**
**ROUTINE MAINTENANCE** ..... **6**
**INSTALLATION** ..... **7**
**SABRY AD DETAILS** ..... **10**
**STOVE POSITIONING** ..... **11**
**NOTE FOR CORRECT OPERATION** ..... **11**
BULB THERMOSTAT REACTIVATION ..... 11
FUSE ..... 11
**PELLETS AND LOADING** ..... **12**
**PELLET HOPPER** ..... **12**
**REMOTE CONTROL (OPTION)** ..... **13**
REMOTE CONTROL ICONS ..... 14
INSERTING THE BATTERIES ..... 14
ADVICE AND PRECAUTIONS FOR THE USE OF THE REMOTE CONTROL ..... 14
**CONTROL BOARD** ..... **15**
ICON KEY ..... 15
GENERAL MENU ..... 16
GENERAL WARNINGS ..... 16
**FIRST IGNITION SETTINGS** ..... **17**
**DATE-TIME** ..... **17**
**LANGUAGE** ..... **17**
**DEGREES** ..... **17**
**OPERATION AND LOGIC** ..... **18**
**MODE** ..... **19**
**VENTILATION** ..... **19**
**EASY SETUP** ..... **19**
**CHRONO** ..... **20**
**ENABLING** ..... **20**
**CHRONO MODE** ..... **20**
**PRG 1-4** ..... **20**
EXAMPLE ..... 21
CHRONO TIME SLOT ..... 21
**MANUAL** ..... **21**
**SET TEMPERATURE** ..... **21**
**AUX** ..... **21**
**SETTINGS** ..... **22**
**DISPLAY** ..... **22**
**STAND BY** ..... **22**
OPERATION WITH ADDITIONAL THERMOSTAT (OPTIONAL) ..... 22
**DELTA-T** ..... **23**
**FIRST LOAD** ..... **23**
**CLEANING** ..... **23**
**RESET** ..... **23**
**WI-FI** ..... **23**
OPERATION AND SOLUTIONS ..... 24
EASY CONTROL ..... 24
**ADDITIONAL FUNCTIONS** ..... **25**
ADDITIONAL THERMOSTAT INSTALLATION (OPTIONAL) ..... 25
DELAY SWITCH-OFF ..... 25
**CLEANING AND MAINTENANCE** ..... **26**
**MAINTENANCE** ..... **26**
PERIODIC CLEANING UNDER USER'S RESPONSIBILITY ..... 26
**ROUTINE MAINTENANCE PERFORMED BY QUALIFIED TECHNICIANS** ..... **29**
SHUT-DOWN (END OF SEASON) ..... 29
**DISPLAYS** ..... **31**
**ALARMS** ..... **31**
**DISPOSAL** ..... **33**
**SYMBOL EN 16510-1** ..... **34**

*We thank you for having chosen our company; our product is a great heating solution developed from the most advanced technology with top quality machining and modern design, aimed at making you enjoy the fantastic sensation that the heat of a flame gives, in complete safety.*

## WARNINGS

This instructions manual is an integral part of the product: make sure that it always accompanies the appliance, even if transferred to another owner or user, or if transferred to another place. If it is damaged or lost, request another copy from the area technician. This product is intended for the use for which it has been expressly designed. The manufacturer is exempt from any liability, contractual and extracontractual, for injury/damage caused to persons/animals and objects, due to installation, adjustment and maintenance errors and improper use.
**Installation must be performed by qualified staff, which assumes complete responsibility for the definitive installation and consequent good functioning of the product installed. One must also bear in mind all laws and national, regional, provincial and town council Standards present in the country in which the appliance has been installed, as well as the instructions contained in this manual.**
**The use of the appliance must comply with all local, regional, national and European regulations.**
**The Manufacturer cannot be held responsible for the failure to comply with such precautions.**
**After removing the packaging, ensure that the content is intact and complete. Otherwise, contact the dealer where the appliance was purchased.**
All electric components that make up the product must be replaced with original spare parts exclusively by an authorised after-sales centre, thus guaranteeing correct functioning.

## SAFETY

- **THE APPLIANCE MAY BE USED BY CHILDREN 8 YEARS OF AGE OR OLDER AND INDIVIDUALS WITH REDUCED PHYSICAL, SENSORY, OR MENTAL CAPACITIES OR WITHOUT EXPERIENCE OR THE NECESSARY KNOWLEDGE, PROVIDED THAT THEY ARE SUPERVISED OR HAVE**

RECEIVED INSTRUCTIONS ON SAFE USE OF THE APPLIANCE AND THAT THEY UNDERSTAND THE INHERENT DANGERS.

- THE GENERATOR MUST NOT BE USED BY PERSONS (INCLUDING CHILDREN) WITH REDUCED PHYSICAL, SENSORY AND MENTAL CAPACITIES OR WHO ARE UNSKILLED PERSONS, UNLESS THEY ARE SUPERVISED AND TRAINED REGARDING USE OF THE APPLIANCE BY A PERSON RESPONSIBLE FOR THEIR SAFETY.
- THE CLEANING AND MAINTENANCE REQUIRED BY THE USER MUST NOT BE PERFORMED BY CHILDREN WITHOUT SUPERVISION.
- CHILDREN MUST BE CHECKED TO ENSURE THAT THEY DO NOT PLAY WITH THE APPLIANCE.
- DO NOT TOUCH THE GENERATOR WHEN YOU ARE BAREFOOT OR WHEN PARTS OF THE BODY ARE WET OR DAMP.
- IT IS FORBIDDEN TO MODIFY THE APPLIANCE IN ANY WAY.
- DO NOT PULL, REMOVE, TWIST THE ELECTRICAL CABLES COMING OUT OF THE PRODUCT EVEN IF IT IS DISCONNECTED FROM THE MAINS.
- IT IS ADVISED TO POSITION THE POWER SUPPLY CABLE SO THAT IT DOES NOT COME INTO CONTACT WITH HOT PARTS OF THE APPLIANCE.
- THE POWER SUPPLY PLUG MUST BE ACCESSIBLE AFTER INSTALLATION.
- DO NOT CLOSE OR REDUCE THE DIMENSIONS OF THE AIRING VENTS IN THE PLACE OF INSTALLATION. THE AIRING VENTS ARE ESSENTIAL FOR CORRECT COMBUSTION.
- THE COMBUSTION CHAMBER DOOR MUST ALWAYS BE CLOSED WHEN THE STOVE IS OPERATING AND MUST ONLY BE OPENED TO ADD FUEL, LIGHT AND CLEAN IT.
- THE HEARTH DOOR MUST ALWAYS BE CLOSED DURING NORMAL FUNCTIONING OF THE PRODUCT.
- WHEN THE APPLIANCE IS FUNCTIONING AND HOT TO THE TOUCH, ESPECIALLY ALL EXTERNAL SURFACES, ATTENTION MUST BE PAID
- CHECK FOR THE PRESENCE OF ANY OBSTRUCTIONS BEFORE SWITCHING THE APPLIANCE ON FOLLOWING A PROLONGED PERIOD OF INACTIVITY.
- THE GENERATOR HAS BEEN DESIGNED TO ADJUST ITSELF AUTOMATICALLY IN PARTICULAR OPERATING CONDITIONS
- THE GENERATOR HAS BEEN DESIGNED TO FUNCTION IN ANY CLIMATIC CONDITION. IN PARTICULARLY ADVERSE CONDITIONS (STRONG WIND, FREEZING) SAFETY SYSTEMS MAY INTERVENE

**THAT SWITCH THE GENERATOR OFF. IF THIS OCCURS, CONTACT THE TECHNICAL AFTER-SALES SERVICE AND ALWAYS DISABLE THE SAFETY SYSTEMS.**

- **IN THE EVENT THE FLUE CATCHES FIRE, USE SUITABLE SYSTEMS FOR SUFFOCATING THE FLAMES OR REQUEST HELP FROM THE FIRE BRIGADE.**
- **THIS APPLIANCE MUST NOT BE USED TO BURN WASTE**
- **NEVER USE PETROL, KEROSENE, LIGHTER FUEL, ETHANOL OR SIMILAR LIQUIDS TO START OR "RELIGHT" THE GENERATOR.**
- **DURING THE FILLING PHASE DO NOT PUT THE BAG OF PELLETS TO INTO CONTACT WITH THE PRODUCT**
- **THE MAJOLICAS ARE TOP QUALITY ARTISAN PRODUCTS AND AS SUCH CAN HAVE MICRO-DOTS, CRACKLES AND CHROMATIC IMPERFECTIONS. THESE FEATURES HIGHLIGHT THEIR VALUABLE NATURE. DUE TO THEIR DIFFERENT DILATION COEFFICIENT, THEY PRODUCE CRACKLING, WHICH DEMONSTRATE THEIR EFFECTIVE AUTHENTICITY. TO CLEAN THE MAJOLICAS, IT IS RECOMMENDED TO USE A SOFT, DRY CLOTH. IF A DETERGENT OR LIQUID IS USED, THE LATTER COULD PENETRATE INSIDE THE CRACKLES, HIGHLIGHTING THEM.**
- **SINCE THE PRODUCT CAN TURN ON AUTOMATICALLY THANKS TO THE TIMER, OR REMOTELY USING THE DEDICATED APPLICATIONS, IT IS STRICTLY FORBIDDEN TO LEAVE ANY COMBUSTIBLE OBJECT WITHIN THE SAFETY DISTANCES INDICATED ON THE TECHNICAL DATA PLATE.**
- **INTERNAL COMBUSTION CHAMBER PARTS CAN BE SUBJECT TO EXTETICAL WARN, IT DOESN'T AFFECT THE FUNCTIONALITY**

## ROUTINE MAINTENANCE

Based on Decree 22 January 2008 n°37 art.2, routine maintenance means interventions aimed at reducing degradation due to normal use, as well as dealing with accidental events entailing the need of first interventions, which however do not modify the structure of the system upon which one is intervening or its intended use according to the requirements laid down by the technical standards in force and by the manufacturer's use and maintenance manual.

# INSTALLATION

## GENERAL

The support surfaces and/or points must have a suitable load-bearing capacity to support the weight of the appliance, of the accessories and coatings.The generator must be on the level for correct operation.
The flue extraction and hydraulic connections must be carried out by qualified personnel who must issue documentation of conformity according to the regulations of the country of installation.
**The installer must give the owner or their representative, the declaration of system conformity, in accordance with current legislation, including:**

1) the use and maintenance manual of the appliance and of the system components (such as for example, the smoke ducts, chimney, etc.);
2) photocopy or photograph of the chimney plaque;
3) system booklet (where applicable).

*The installer must ask to be issued with a receipt stating that the documentation has been provided, and must keep it with a copy of the technical documentation relating to the installation.*
If installed in a condominium, the administrator must be consulted beforehand.
If necessary, check the exhaust fume emissions after installation.Any inspection point included should be watertight.

**COMPATIBILITY**
Installation in premises with fire hazards is forbidden.Installation in residential premises where the following situations occur is also prohibited:

1. where there are liquid fuel-operated appliances with continuous or intermittent operation, which draw the combustion air in the room in which they are installed.
2. where there are type B gas appliances intended for room heating, with or without production of DHW and in adjacent and adjoining premises.
3. where, in any case, the pressure difference measured during installation between the internal and external environment is greater than 4 Pa.

N.B.:Watertight appliances can also be installed in the cases indicated by points 1, 2 and 3 of this paragraph.

**INSTALLATIONS IN BATHROOMS, BEDROOMS AND STUDIO FLATS**
Installation in bathrooms, bedrooms and studio flats is only allowed for sealed or closed hearth appliances with ducted combustion air taken from the outside.

## MINIMUM DISTANCES FROM COMBUSTIBLE MATERIALS

Installation next to combustible or heat-sensitive materials is permitted, **provided that suitable safety distances are maintained, as specified in the CEMI (CE Marking Information), the Declaration of Performance (DoP) and the label at the beginning of the manual (page 2)**.
We suggest using non-combustible material for the side and rear walls and support surface on the floor.
If the floor is made of combustible material, it is recommended to use a non-combustible protective layer, which must cover the area under the appliance and extend forward by at least the distance specified as $d_F$.
For installation near non-flammable materials, a minimum side and rear clearance must be maintained, as indicated by the distance marked $d_{non}$.
For products with rear spacers, installation flush with the wall is allowed <u>at the rear only</u>.

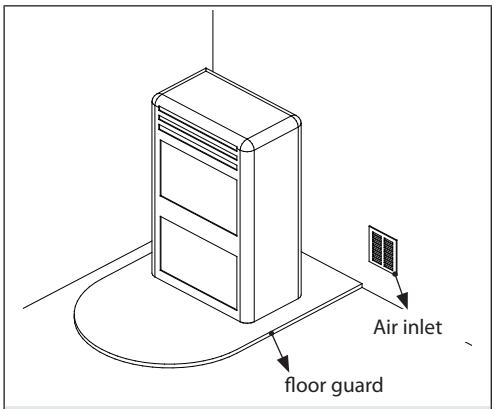


One must also bear in mind all laws and national, regional, provincial and town council standards present in the country in which the appliance has been installed, as well as the instructions in this manual.

## MAINTENANCE PREPARATION

It might be necessary to place the product away from adjacent walls for maintenance operations.This operation must be carried out by a technician who is qualified to disconnect the flue gas evacuation ducts and subsequent connection.For generators connected to the plumbing system, a connection must be provided between the system and the stove that allows the generator to be moved at least 1 metre away from adjacent walls during extraordinary maintenance work performed by a qualified technician

## INSTALLATION OF INSERTS

When installing inserts, it is necessary to prevent access to the internal parts of the appliance, and when removing them, it must not be possible to access live parts.
Any wiring, such as the power cable or room probes, must be positioned in such a way that they are not damaged when the insert is moved and do not come into contact with hot parts.If a cavity made of combustible material is installed, it is advisable to take all the safety precautions indicated in the installation regulations

## VENTILATION AND AERATION OF THE INSTALLATION PREMISES

Ventilation, in the case of a non-watertight generator and/or non-watertight installation, must be carried out respecting the minimum area indicated below (considering the largest of the values suggested:

| Appliance categories | Reference standard | Percentage of the net opening section with respect to the appliance fumes outlet section | Minimum net opening value of the ventilation duct |
|---|---|---|---|
| Pellet stoves | EN 16510-1; EN 16510-2-6 | - | 80 $cm^2$ |
| Boilers | EN 303-5 | 50% | 100 $cm^2$ |

**The difference in pressure between the generator installation rooms and the exterior must always be ≥ -4 Pa under any condition (e.g. -3 Pa is an acceptable value), including in the presence of extraction hoods and/or controlled forced ventilation systems**

The air inlets must meet the following requirements:
- They must be protected with grids, metal mesh, etc., but without reducing the net useful section;
- They must be made so as to make the maintenance operations possible;
- Positioned so that they cannot be obstructed;

The inflow of clean, uncontaminated air can also be obtained from a room next to the installation room (indirect ventilation and aeration) as long as this flow can occur freely through permanent openings communicating with the outside.
The adjacent room cannot be used as a garage, warehouse of combustible material or for any other activity with a fire hazard, bathroom, bedroom or common room of the building.

## FLUE DISCHARGE

The heat generator works under a vacuum and is fitted with an outlet fan for fumes extraction.The exhaust system must be used by the generator only. No flue discharges shared with other devices are allowed.

The components of the flue gas evacuation system for combustion products must be chosen and sized in accordance with current regulations, depending on the specific situation at the place of installation.
The following checks are recommended:

- The flue system must be assessed in accordance with the following technical standards (where applicable):EN 15287-1, EN 15287-2, EN 13063-1, EN 13063-2, EN 1457, EN 1806, EN 1856-1, EN 1856-2 and EN 13384-1;
- The correct operation of the flue system must be checked in accordance with the EN 13384-2 standard based on the specific situation at the place of installation;
- The installation of watertight appliances must also take the EN 13063-3 and EN 14989-2 standards into account;
- Where the design provides for operation in humid conditions, there must be a suitable condensate collection system and possibly a siphoned drain.
- The length of the horizontal section should be minimal and, in any case, no longer than 2 metres, with a minimum upward gradient of 3%
- The number of direction changes including the one due to the use of the "T" element must not be more than 4.
- A “T” fitting with a condensation collection cap must be included at the base of the vertical section.
- The vertical pipe can be on the inside or outside of the building.If the flue is fitted in an existing chimney, it must be certified for solid fuels.
- If the flue is outside the building, it must always be insulated.
- The flue must have at least one sealed outlet for possible fume sampling.
- All the sections of the flue pipe must be accessible for inspection.
- Inspection openings must be included for cleaning.

If metal pipes are used, they must comply with the following requirements (EN 1856-1 and EN1856-2):

- Flue pipe - Temperature class (as indicated in the technical datasheet) resistant to soot fire
- Flue pipe - Temperature class, at least T250, Pressure class, P1 (not indicated in the technical datasheet)

### CHIMNEY COWL

The chimney caps must meet the following requirements:
- they must have a useful outlet section no less than double of that of the chimney/ducted system on which it is installed;
- they must be adapted in order to prevent the penetration of rain and snow in the chimney/ducted system;
- they must be built so that, in the event of winds coming from all directions and from any angle, the expulsion of combustion products is in any case ensured;

## SHARED CHIMNEY FLUE

Check on the CE Technical Data Sheet whether the product is suitable for installation in a shared chimney flue (i.e. with multiple connection).

Suitable devices can be installed in shared flue systems provided that:
- installation in a shared chimney flue (i.e. with multiple connection) is allowed in the place of installation;
- the requirements of national and regional Standards are strictly complied with [for GERMANY, for example, DIN EN 13384-2, DIN V 18160-1, DIN 18896 and MFeuV-2007 (Muster-Feuerungsverordnung)];
- the installer or district chimney sweep has inspected and approved the installation conditions.

Please also remember the following indications, which the end user must comply with:
- The device can be operated only with the doors closed.
- The doors and all setting devices must remain closed when the device is not on (except for cleaning and maintenance operations).

**EXAMPLES OF CORRECT CONNECTION TO THE CHIMNEY**

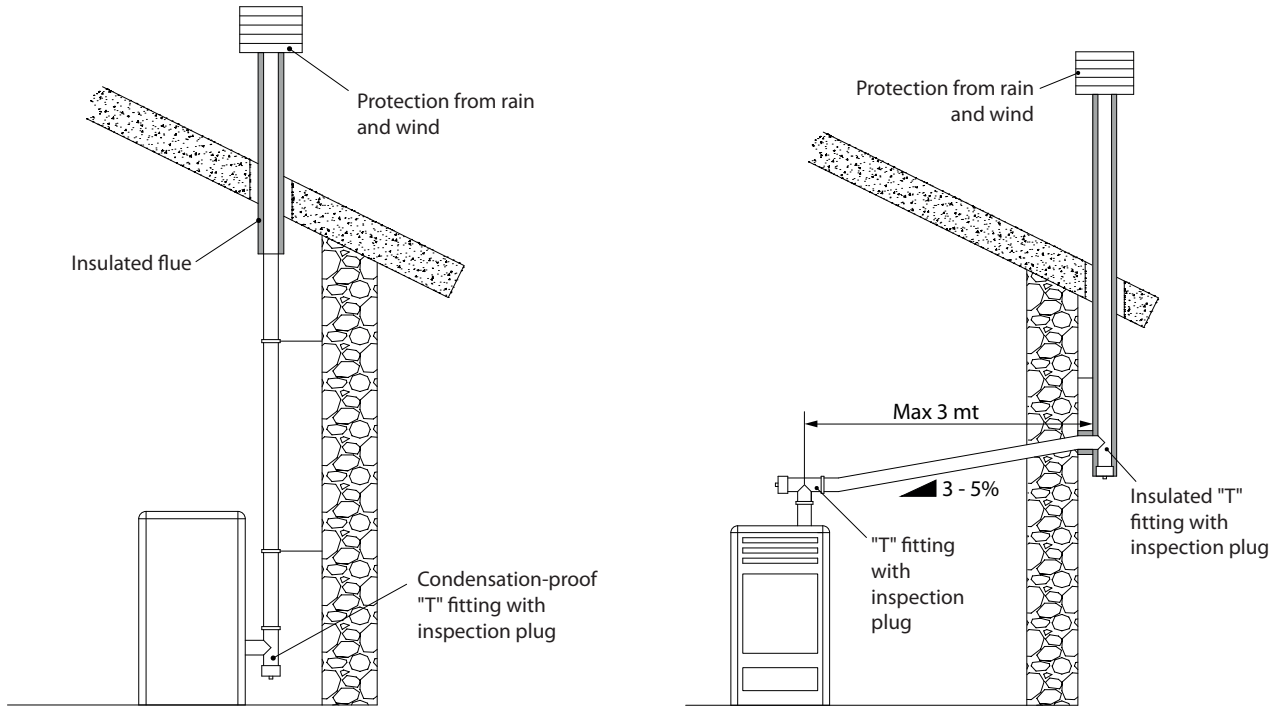


## CONNECTION TO THE ELECTRICITY GRID

The generator is supplied with a power cable for connection to a 230V 50 Hz socket, possibly with a circuit breaker.The power socket must be easily accessible.
The electrical system must be compliant; check the efficiency of the grounding circuit in particular.Inadequate grounding of the system can cause a malfunction for which the manufacturer is not responsible.
Power fluctuations over 10% may cause product malfunctions.

# SABRY AD DETAILS

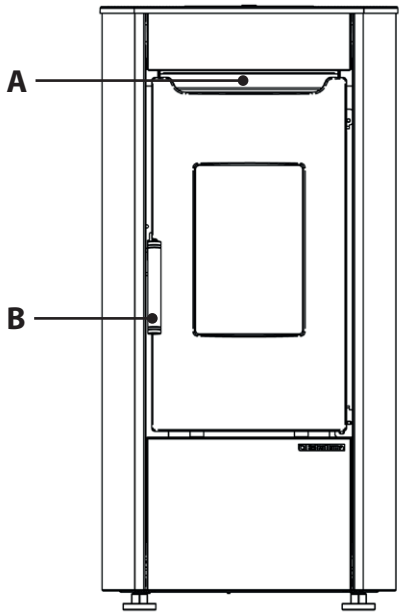


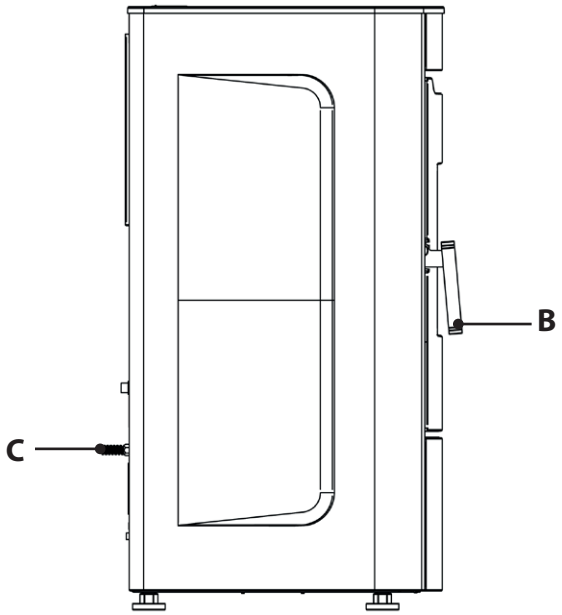


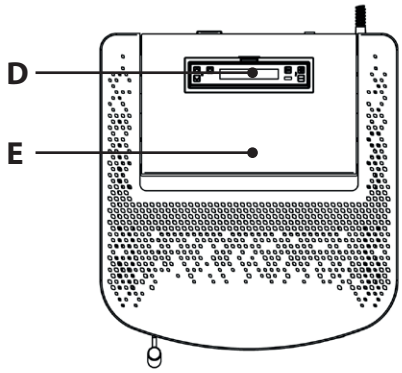


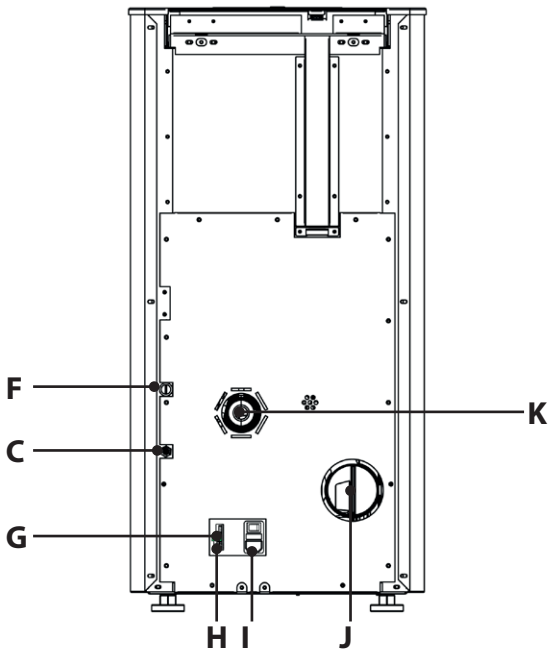


| | | | | | |
|---|---|---|---|---|---|
| **A** | Room air outlet | **E** | Pellet hopper | **I** | On/Off<br>Fuse<br>230V power supply |
| **B** | Access to combustion chamber and ash drawer | **F** | Bulb thermostat reactivation | | |
| **C** | Room probe | **G** | Serial input | **J** | Rear flue gas outlet |
| **D** | Display | **H** | Additional thermostat Input | **K** | Combustion air inlet |

# STOVE POSITIONING

For correct product functioning, it is recommended to position it in a way that it is perfectly level, with the aid of a spirit level.

# NOTE FOR CORRECT OPERATION

**ENSURE THE HOPPER IS PROPERLY CLOSED BEFORE TURNING ON THE DEVICE!**

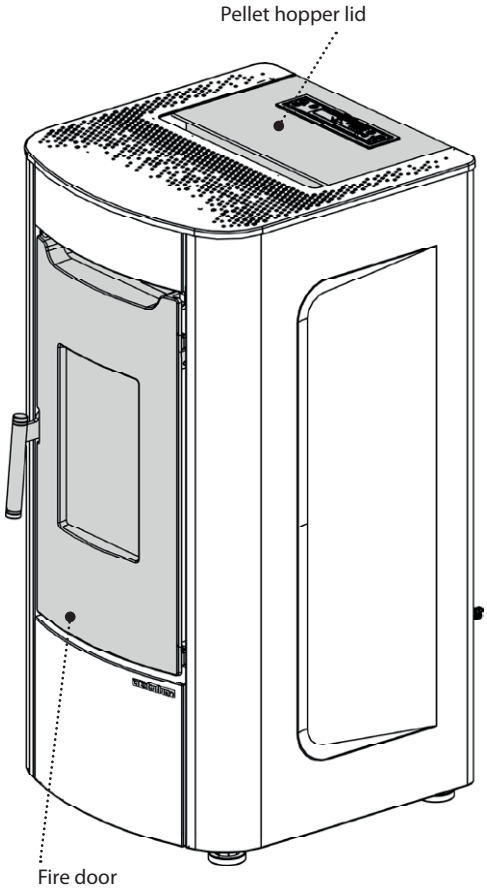


**DURING START-UP:**
The generator performs a check on the combustion air flow during the START phase.
If any faults are found, the generator will go into "MIN DELTA-P ALARM 1" mode.

**DURING IGNITION:**
be sure to keep the fire door and the tank cover closed during the entire ignition phase.
Otherwise, the stove will display

"CLOSE HOPPER" or "CLOSE STOVE DOOR"

**This indication means that you have 60 seconds to close the door.**

After 60 seconds have passed, the stove will go into "DEPR ALARM" mode during the ignition phase

**DURING WORK:**
be sure to keep the dire door and the tank cover closed during the entire WORK phase.
Otherwise, the stove will display

"CLOSE HOPPER" or "CLOSE STOVE DOOR"

**This indication means that you have 60 seconds to close the door.**

After 60 seconds have passed, the stove will go into "COOLING STAND BY" mode

If "MIN DELTA-P" appears, it means that the appliance has detected abnormal conditions in the combustion air or flue gas outlet flows.

If the conditions do not stabilise within the time indicated by the TIMER on the display, the stove will go into "MIN DELTA-P ALARM 2" mode.

## BULB THERMOSTAT REACTIVATION

The figure shows the position of the hopper safety thermostat (A).
It is recommended to contact the qualified technician if one of the thermostats is triggered, so as to verify the cause.

## FUSE

If the stove is not powered, it is recommended to have the fuse (B) checked by a qualified technician.

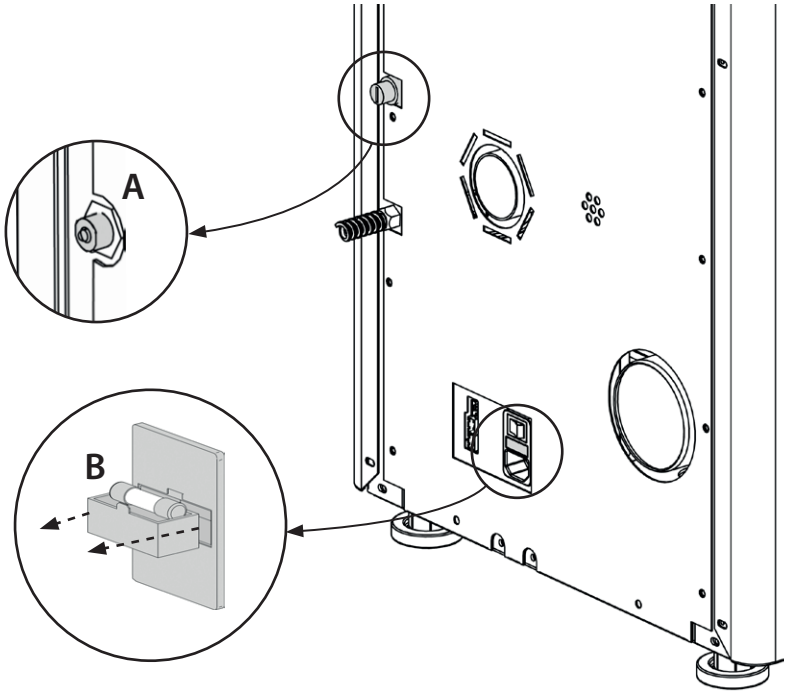

# PELLETS AND LOADING

Pellets are made by subjecting wood shavings i.e. the rejects of pure unpainted wood from sawmills, carpentry products and products from other activities connected to wood working and transformation, to very high pressures.
This type of fuel is fully ecological as no glues are used for its compaction. In fact, pellet compactness is guaranteed over time by a natural substance found in wood: lignin.
In addition to being an ecological fuel, making best use of wood residue, pellets also have a series of technical advantages.
While wood has a calorific value of 4.4 kWh/kg (with 15% moisture, therefore after approximately 18 months of curing), that of pellets is 5 kWh/kg.
Pellet density is about 650 kg/m$^3$ and water content is equal to 8% of its weight. For this reason pellets do not need to be cured to obtain a sufficient heat yield.

The pellets used must be class **A1** certified according to standard **ISO 17225-2** (**ENplus-A1, DIN Plus** or **NF 444** of the following category: "High quality NF biocombustible wood pellets").

**UNI EN 303-5** with the following characteristics: water content ≤ 12%, ash content ≤ 0.5% and lower calorific value >17 MJ/kg (in the case of boilers).

The Manufacturer recommends using pellets with a diameter of 6mm with its products.

**PELLET STORAGE**

To guarantee combustion without problems, the pellets must be kept in a dry place.
Open the tank lid and load the pellets using a scoop.

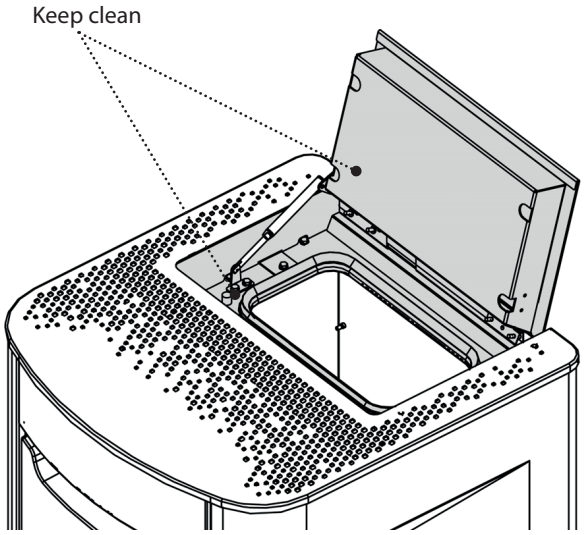


**THE USE OF POOR QUALITY PELLETS OR ANY OTHER MATERIAL DAMAGES THE FUNCTIONS OF THE GENERATOR AND MAY INVALIDATE THE WARRANTY AND RELIEVE THE MANUFACTURER OF ALL RESPONSIBILITY.**

# PELLET HOPPER

During stove operation, the pellet hopper lid must always be closed.

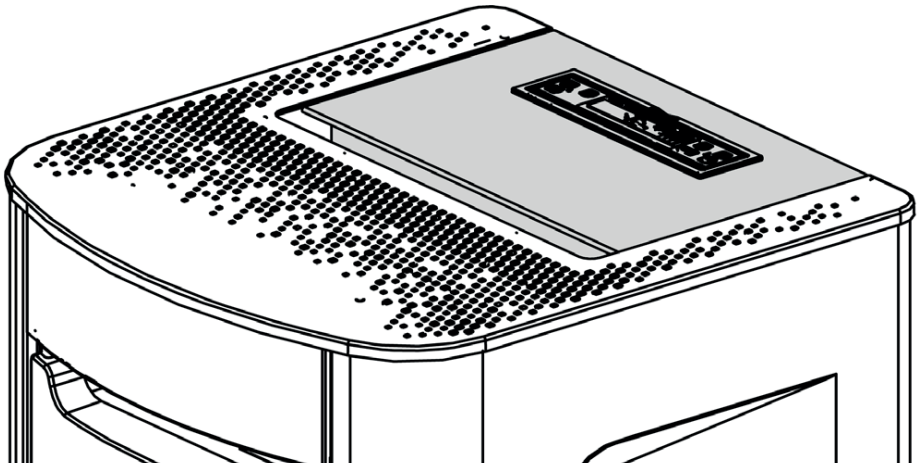

**DO NOT PLACE THE BAG DIRECTLY ON THE STOVE WHEN LOADING THE HOPPER!**
**ALWAYS USE A SCOOP TO LOAD THE HOPPER. DO NOT RUB AGAINST OR PLACE WEIGHTS ON THE HOPPER SEAL, KEEP THE HOPPER LID SEAL SUPPORTING SURFACE CLEAN AT ALL TIMES. CHECK THE CONDITIONS OF THE SEAL FREQUENTLY. IN CASE OF DETERIORATION, CONTACT YOUR LOCAL AUTHORISED TECHNICIAN.**

# REMOTE CONTROL (OPTION)

The remote control can be used to adjust the main stove functions.

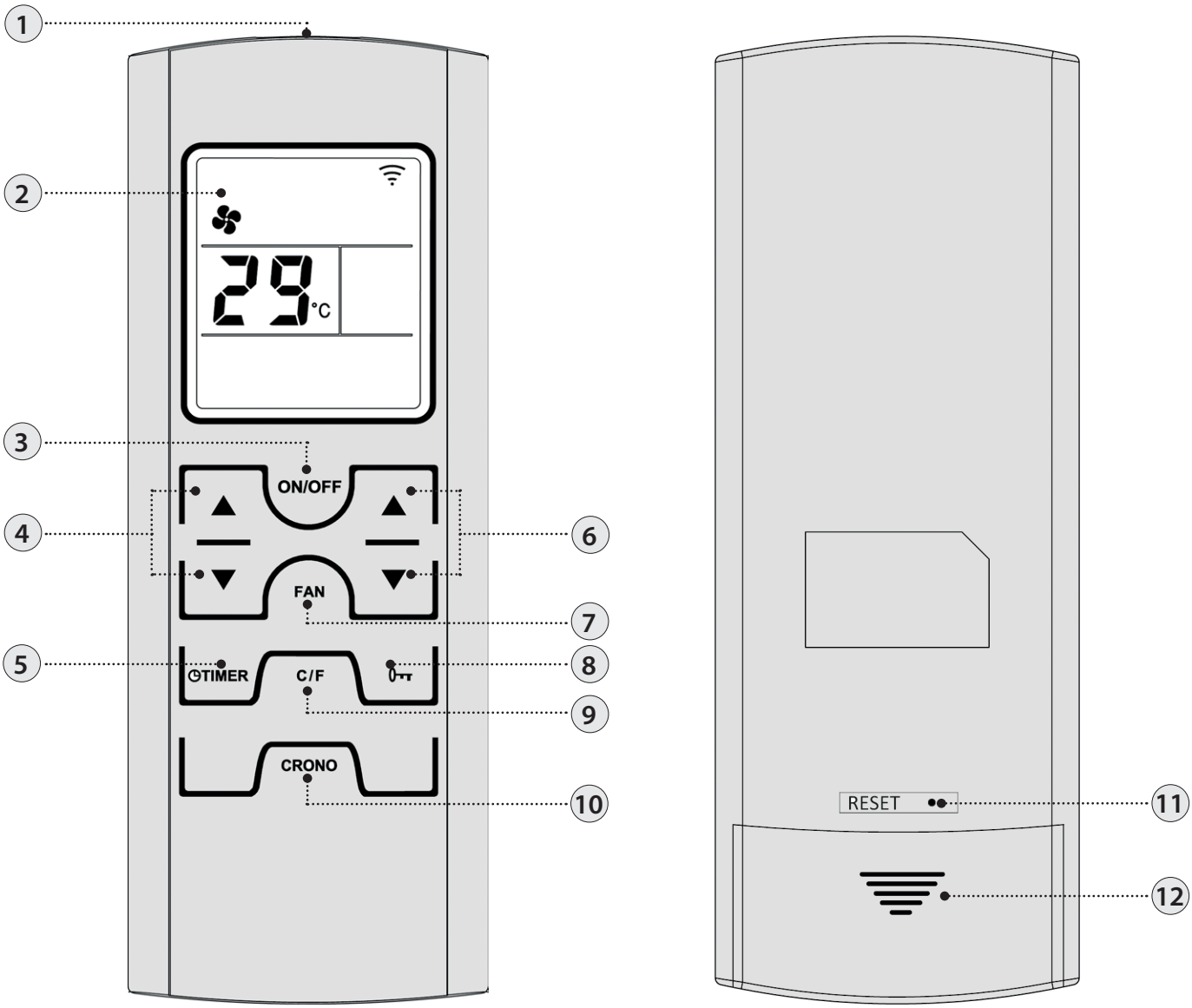


| | | | |
|---|---|---|---|
| **1** | Transmitter | **7** | Select air mode |
| **2** | Display | **8** | Lock keyboard |
| **3** | On/off stove (hold for 3 seconds) | **9** | Degrees Celsius / Fahrenheit |
| **4** | Set power | **10** | Press the button once to enable or disable the chrono |
| **5** | Set switch-off delay: The button allows to set the switch-off delay.<br>For example, if you set it to one hour, the stove will automatically switch off after the set time | **11** | Reset |
| **6** | Set room temperature | **12** | Battery compartment |

## REMOTE CONTROL ICONS

| | | | |
|---|---|---|---|
| | Air mode selected:<br>Flashing QUIET<br>On REGULAR | | Enable chrono<br>Light on = activated<br>Light off = deactivated |
| OFF TIME<br>6:00 | Set switch-off delay | | Indicates the transmission of the radio signal<br>On = during all radio communication<br>Off = radio communication absent |
| | Battery low | | Keys locked |
| P3 | Set power level.<br>The power level is displayed, instead of the set room temperature, for 3 seconds when one of the set power buttons is pressed (4). | | |

## INSERTING THE BATTERIES

Remove the battery compartment cover by sliding it down. Insert 2 AAA batteries.
Insert the batteries respecting the correct polarity (+) and (-).
Close the cover of the battery compartment.

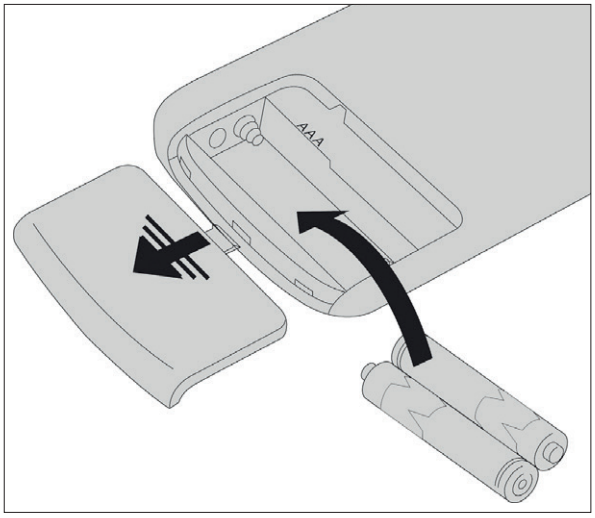


**IF THE REMOTE CONTROL IS SWITCHED OFF DUE TO NO BATTERY INSTALLED, THE STOVE CAN BE CONTROLLED FROM THE COMMAND PANEL LOCATED ON THE UPPER PART OF THE STOVE. WHEN CHANGING THE BATTERIES, MAKE SURE YOU FOLLOW THE SYMBOLS PRINTED INSIDE THE REMOTE CONTROL.**

**Respect the environment!**
Used batteries contain metals that are harmful to the environment, and therefore must be disposed of separately in special containers.

## ADVICE AND PRECAUTIONS FOR THE USE OF THE REMOTE CONTROL

- Remove the batteries if it is not used for a long time.
- When being used, direct it towards the stove's signal receiver.
- Handle the remote control with care. When it is not being used, place it on the special base supplied.
- The remote control must not be left in a place where it is exposed to direct sunlight or near a source of heat.
- The quality of the signal may be affected by other IR sources.

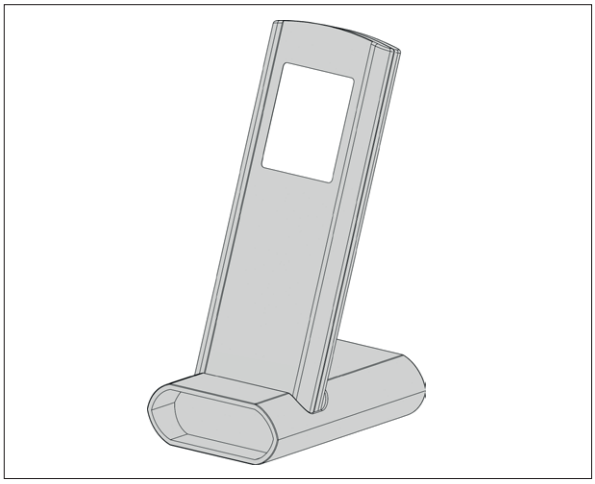

**THE REMOTE CONTROL IS FITTED WITH AN LCD BACKLIT DISPLAY. THE BACKLIGHTING LASTS 20 SECONDS FROM THE LAST PRESS OF A BUTTON. AFTER A CERTAIN TIME, TO SAVE BATTERY POWER, THE DISPLAY TURNS OFF (ENERGY SAVING MODE).**
**THE CONTROL FUNCTIONS ARE REACTIVATED WHEN THE REMOTE IS REMOVED FROM ITS UNIT OR BY A LONG PRESS OF THE BUTTON.**

# CONTROL BOARD

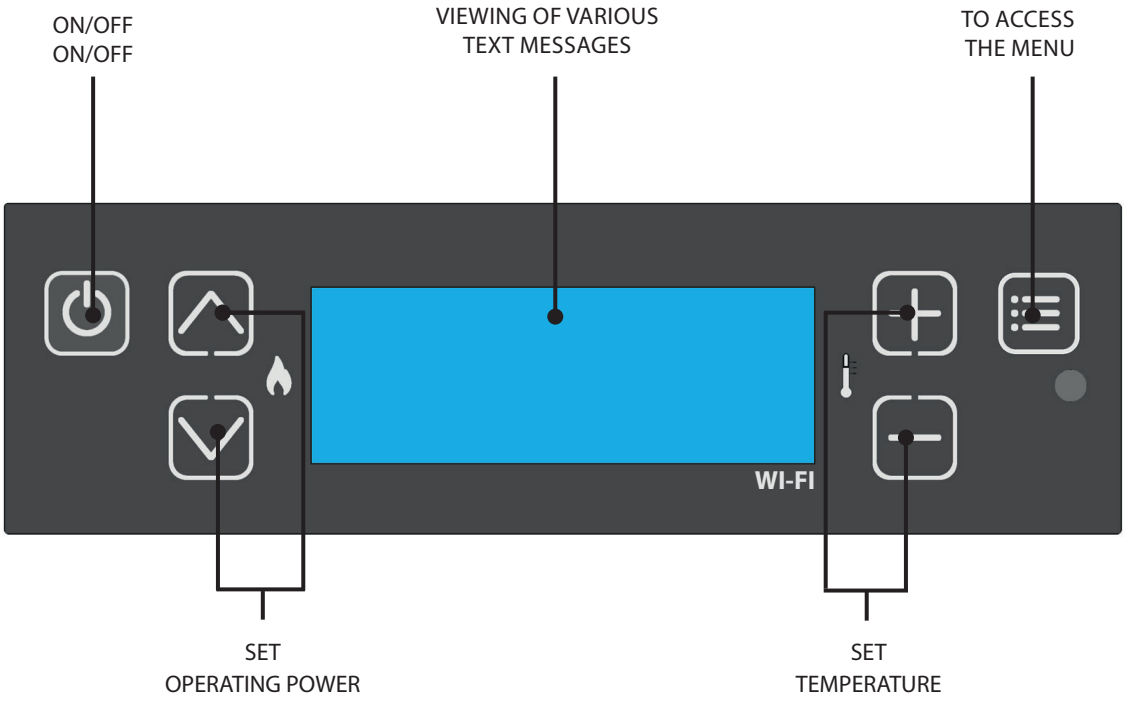


| ICON KEY | | | |
|---|---|---|---|
| | Indicates the presence of an ALARM.<br><br>Off: indicates that there are no alarms<br>On: indicates the presence of an alarm | | CHRONO function icon<br>Indicates the status of the weekly programming<br><br>Off: deactivated.<br>On: activated. |
| | BLUETOOTH icon<br><br>Off: Bluetooth connection absent<br>On: Bluetooth connection present | | WI-FI icon<br><br>Off: WI-FI communication not present<br>Flashing: Connection in progress<br>On: The product is correctly connected to the server |
| | Indicates contact of the additional outdoor thermostat<br><br>Closed contact: the contact of the external additional thermostat is closed.<br>Open contact: the contact of the external additional thermostat is open.<br><br>(Icon visible only if MODES is set to "AUX") | STBY | STAND BY function icon<br><br>Off: deactivated.<br>On: activated. |
| P3<br>P3 | Indicates the stove power.<br><br>Lower line present: the power is increasing or decreasing.<br>Lower line absent: power stable | | Indicates the DELAY SWITCH-OFF function<br><br>On = delay switch-off active<br>Off = delay switch-off not active |

## GENERAL MENU

1 Go back - exit
2 3 Scroll parameters: next (3); previous (2)
4 5 Change settings data: increase (4); decrease (5)
6 Confirm - access menu

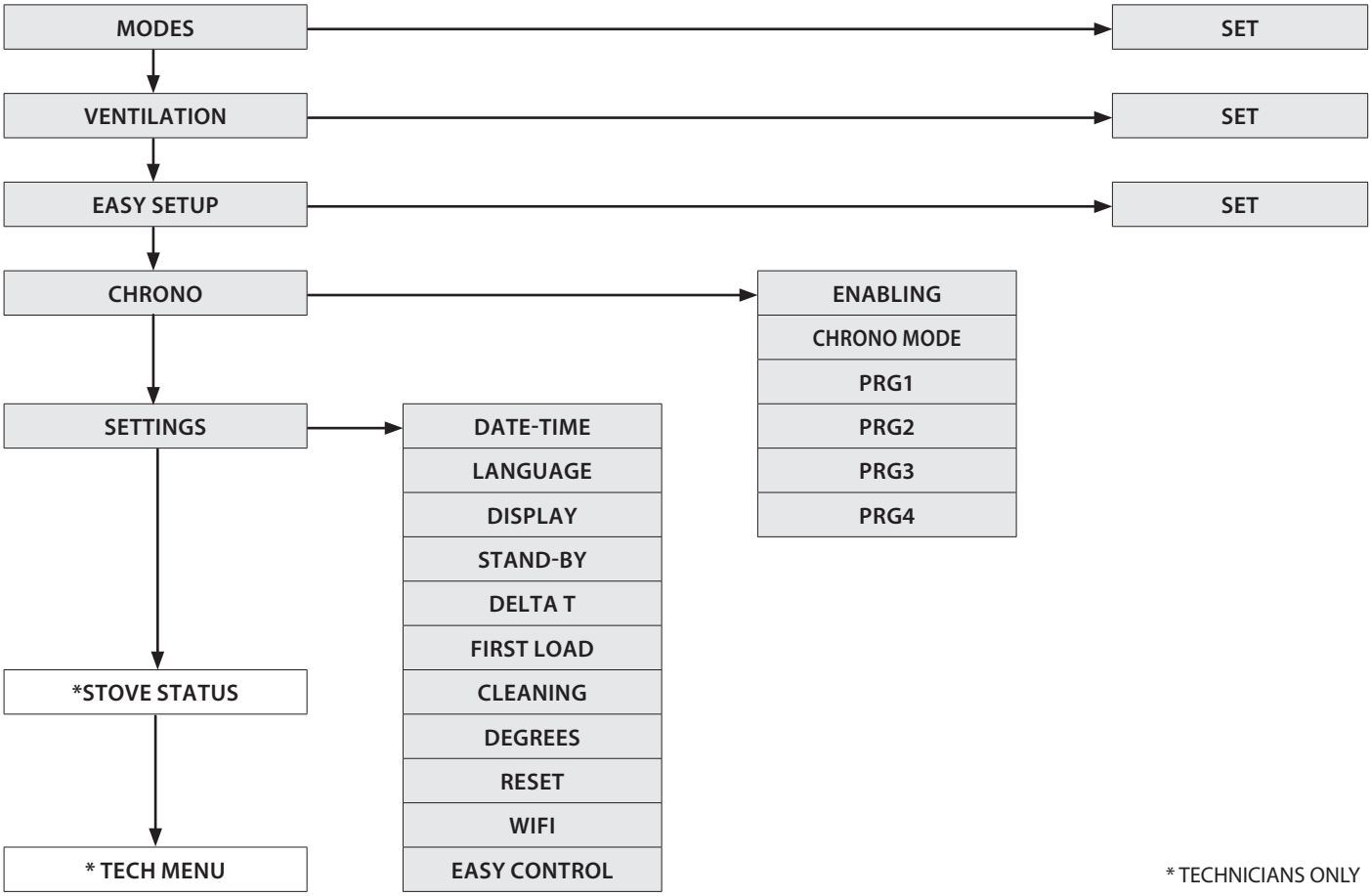


* TECHNICIANS ONLY

## GENERAL WARNINGS

**Advice to follow for the first start-ups of the product:**
During the first hours of operation, there may be some smoke or odours, but they are due to the normal "thermal break-in" process. During this process, the duration of which changes depending on the product, it is recommended to:

- Ventilate the room well
- If present, remove any majolica or natural stone parts from the top part of the product
- Activate the product at the maximum power and temperature
- Avoid remaining in the room for a long time
- Do not touch the surfaces of the product

Notes:
The process is completed after a few heating/cooling cycles.
For combustion, do not use elements or substances other than those indicated in the manual.

**Before turning on the product, it is necessary to perform the following checks:**

- If it is intended to be connected to a hydraulic system, it must be complete and fully functional and in compliance with the instructions given in the product manual and with the relevant regulations in force.
- The pellet hopper must be fully loaded
- The combustion chamber and the burn pot must be clean
- Make sure that the fire holder, the ash drawer and the pellet hopper close hermetically (if present in the hermetic version); they must be closed and there must be no foreign bodies in the sealing elements and gaskets.
- Check that the power cord is properly connected
- The switch (if present) must be set to position "1".

# FIRST IGNITION SETTINGS

After connecting the power cord at the back of the generator, turn the switch (if any) to position (I).
The switch is used to power the heat generator board.

## DATE-TIME

This menu allows the date and time to be set.

CONTROLS PROCEDURE
- Press key 6.
- Press key 3 until SETTINGS appears and confirm by pressing key 6.
- Confirm DATE-TIME by pressing key 6 and using keys 4 and 5 to set the day.
- Continue by pressing key 6.
- Use keys 4 or 5 to set and key 6 to advance, to set the day, hour, minutes, date, month, year.
- Press key 6 to confirm and key 1 to scroll back through the menus until the initial page.

## LANGUAGE

This menu allows the preferred language to be selected.
The available languages are:
Italian - English - German - French - Spanish - Portuguese - Danish - Estonian - Croatian - Slovenian - Dutch - Polish - Czech.

CONTROLS PROCEDURE
- Press key 6.
- Press key 3 until SETTINGS appears and confirm by pressing key 6.
- Press key 3 until LANGUAGE appears and confirm by pressing key 6.
- Select the language using keys 4 or 5.
- Press key 6 to confirm and key 1 to scroll back through the menus until the initial page.

## DEGREES

This menu allows you to set the unit of measurement for the temperature. The predefined value is °C.

CONTROLS PROCEDURE
- Press key 6.
- Press key 3 until SETTINGS appears and confirm by pressing key 6.
- Press key 3 until DEGREES appears and confirm by pressing key 6.
- Use keys 4 -5 to select Celsius or Fahrenheit.
- Press key 6 to confirm and key 1 to scroll back through the menus until the initial page.

**MAKE SURE THAT THERE ARE NO RESIDUES OR DIRT AT THE BOTTOM OF THE BURN POT. THE HOLES AT THE BOTTOM MUST BE COMPLETELY FREE TO GUARANTEE PROPER COMBUSTION. THE "**EASY SETUP**" FUNCTION CAN BE USED TO ADAPT COMBUSTION BASED ON THE DESCRIBED NEEDS.**

BURN POT BOTTOM

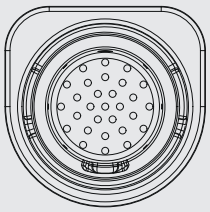

**NO IGNITION**

**THE APPLIANCE MAY FAIL TO LIGHT BECAUSE THE AUGER IS EMPTY AND NOT ALWAYS ABLE TO LOAD THE BURN POT FAST ENOUGH WITH THE PELLETS NEEDED FOR NORMAL IGNITION. IF THE PROBLEM OCCURS AFTER ONLY A FEW MONTHS OF OPERATION, CHECK THAT THE ROUTINE CLEANING DESCRIBED IN THE STOVE HANDBOOK HAS BEEN CARRIED OUT CORRECTLY**

**IT IS FORBIDDEN TO USE THE DEVICE WITHOUT THE FLAME GUARD (SEE FIGURE TO THE SIDE). REMOVAL WILL COMPROMISE THE SAFETY OF THE PRODUCT AND RESULT IN THE IMMEDIATE NULLIFICATION OF THE WARRANTY PERIOD. IN THE EVENT OF WEAR OR DETERIORATION, ASK THE AFTER-SALES SERVICE TO REPLACE THE PARTS (REPLACEMENT DOES NOT FALL WITHIN THE PRODUCT WARRANTY AS THE PART IS SUBJECT TO WEAR).**

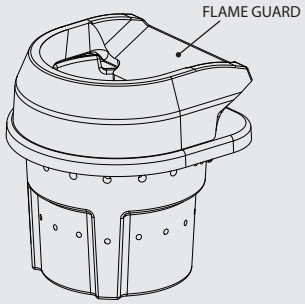


# OPERATION AND LOGIC

**IGNITION**

Once the previously listed points have been checked, press key 1 for three seconds to ignite the stove. During ignition, the stove will check for a flame for a period of 15 minutes. Once the control temperature has been reached, the stove interrupts the ignition phase and switches to PREPARATION.
The stove is set to TEMPERATURE SET mode, power 5, by default.

**PREPARATION**

During the preparation phase, the stove stabilises combustion, increasing it progressively, to then start ventilation and switch to WORK

**WORK IN** MANUAL MODE

During the work phase, the stove reaches the POWER defined by the user, heating the room using the VENTILATION set by the user.

**ADJUSTMENT IN SET TEMPERATURE** MODE

This mode, by means of the SET THERMOSTAT, allows for the room temperature to be set.
The adjustment is made using buttons 2 and 3, from 7 to 37°C.
If the value is between 7°C - 37°C, the stove checks the room temperature using a probe on the machine.
See paragraph MODE for more details.

**AUX MODE**

If AUX MODE is selected, temperature control is entrusted to the contact of the additional thermostat, thus ignoring the temperature probe built.
If the contact is open (met), the stove operates at the minimum value (or it switches off if STAND BY mode is active).
If the contact is closed (request), the stove works at the set power.

**REGULATION OF SET POWER**

Set Power has 5 levels of operation. The power can be changed with keys 2 or 3.
Power 1 = minimum level - Power 5 = maximum level.
Press key 1 to exit and save the change.

**AUTO BLOW**

During the work phase, the stove cleans the burn pot at regular intervals with the function called "AUTO BLOW".
When this procedure starts, a message is displayed. During the "AUTO BLOW" procedure, the pellet feed slows down and the fumes motor increases.
After cleaning, the stove resumes operation in normal conditions.

**SWITCH-OFF**

Press key 1 for three seconds.
Once this operation has been performed, the appliance automatically enters the switch-off phase, blocking the pellet feed.
The flue gas exhaust motor and the hot air flow motor will remain on until the stove temperature has dropped below the safety settings.

**REIGNITION**

The stove can only be re-ignited if the temperature of the exhaust fumes is lower than the preset threshold and the minimum safety time has passed.

## MODE

This menu is used to set the operating logic of the machine for the power used.
Range: (MANUAL, SET TEMPERATURE, AUX)

By selecting MANUAL mode, the user can choose the heat output level delivered and the type of VENTILATION, according to his/her preferences.
The stove will operate only according to the settings set by the user.

By selecting SET TEMPERATURE mode, the user can set the desired room temperature, the power and the VENTILATION to be used.
The stove controls the room temperature using a probe on board the machine. Once the set temperature has been reached, the stove automatically reduces the power, guaranteeing best comfort and reducing pellet consumption: this process is called "modulation".

By selecting AUX mode, the user can choose the power level delivered and the type of VENTILATION.
The stove will adjust its operation based on the external thermostat **TA**.
With the contact closed, the stove operates according to the set settings; with the contact open, the stove switches to minimum modulation (or it switches off if the STAND BY function is active).

CONTROLS PROCEDURE
- Press key 6.
- Press 3 until MODE appears and confirm by pressing 6.
- Use keys 4 -5 to set the desired MODE.
- Press key 6 to confirm and key 1 to scroll back through the menus until the initial page.

## VENTILATION

This feature uses the ***PRO AIR SETUP*** which allows for the ventilation to be adjusted according to 3 levels: QUIET, REGULAR, BOOST.

- QUIET: Ventilation works to optimise acoustic comfort. The fans run at a reduced speed.
- REGULAR: To obtain the best possible balance between performance and comfort. This is the factory setting.
- BOOST: When you want to feed the set heat output of the appliance into the room as fast as possible.

CONTROLS PROCEDURE
- Press key 6.
- Press 3 until VENTILATION appears and confirm by pressing 6.
- Use keys 4-5 to set the desired mode.
- Press key 6 to confirm and key 1 to scroll back through the menus until the initial page.

## EASY SETUP

The volumetric weight of the pellet is the ratio between the weight and the volume of the pellet. This ratio may change without altering pellet quality. By using the EASY SETUP function, it is possible to dose the pellets by increasing or decreasing the preset values.
In the stove program, the available values range from "– 3" to "+ 3"; all stoves are calibrated during production with the optimal value which is 0

If you notice an excessive deposit on the burn pot, access the EASY SETUP program and lower the value by one unit to "- 1"; then wait until the next day and if there is no improvement, decrease again, to a maximum of "- 3". If, on the other hand, it is necessary to increase the pellet dosage, switch the factory value from "0" to "+ 1, + 2, + 3" as required.

CONTROLS PROCEDURE
- Press key 6.
- Press key 3 until EASY SETUP appears and confirm by pressing key 6.
- Use keys 4 -5 to set the range.
- Press key 6 to confirm and key 1 to scroll back through the menus until the initial page.

| EXCESSIVE PELLET DEPOSIT IN BURN POT | | | NORMAL OPERATION | MINIMUM PELLET DEPOSIT IN BURN POT | | |
|---|---|---|---|---|---|---|
| -3 | -2 | -1 | 0 | +1 | +2 | +3 |
| THIRD DECREASE RANGE IF THE FIRST TWO ARE INSUFFICIENT | SECOND DECREASE RANGE IF THE FIRST IS INSUFFICIENT | FIRST DECREASE RANGE (TEST FOR 1 DAY) | OPTIMAL FACTORY VALUE | FIRST INCREASE RANGE | SECOND INCREASE RANGE IF THE FIRST IS INSUFFICIENT | THIRD INCREASE RANGE IF THE FIRST TWO ARE INSUFFICIENT |

**N.B.: IF THESE ADJUSTMENTS DO NOT SOLVE THE PROBLEM OF PELLET DEPOSITS IN THE BURN POT, PLEASE CONTACT YOUR LOCAL SERVICE CENTRE.**

# CHRONO

This function allows stove ignition and switch-off to be automatically programmed.
The factory setting for CHRONO is off.
The chrono allows the programming of 4 time slots per day, which can be used every day of the week. **In each time slot, it is possible to set the ignition and switch-off times, the days of use of the programmed time slot, the desired temperature (if** SET TEMPERATURE**) is used and the set power. Current day and time settings are essential for the correct operation of the Chrono.**

**Recommendations**
**Before using the chrono function, you must set the current date and time, so check that you have followed the points listed in the sub-chapter "**DATE-TIME**". To use the chrono function correctly, it must not only be programmed, but also enabled. The 4 time slots can be overlapped using the ignition and switch-off time settings. In this way, it is possible to create a combination of time slots with different temperatures and power levels, without changing the status of the stove.**
**N.B.: in the case of overlapping time slots, the stove will remain on until the last switch-off time.**

## ENABLING

Allows the chrono and the different stove time slots to be enabled/disabled.

CONTROLS PROCEDURE
- Press key 6.
- Press 3 until CHRONO appears and confirm by pressing key 6.
- Confirm ENABLING by pressing 6.
- Use keys 4 -5 to enable (ON) or disable (OFF)
- Press key 6 to confirm and key 1 to scroll back through the menus until the initial page.

## CHRONO MODE

It allows the user to choose in which MODE the stove will be switched on in the set time slots, choosing between: MANUAL, SET TEMPERATURE, AUX

CONTROLS PROCEDURE
- Press key 6.
- Press 3 until CHRONO appears and confirm by pressing key 6.
- Press 3 until MODE appears and confirm by pressing 6.
- Use keys 4-5 to set the desired mode.
- Press key 6 to confirm and key 1 to scroll back through the menus until the initial page.

## PRG 1-4

Prg x allows you to set the ignition and switch-off time, the days of use of the programmed time slot, the temperature and also the desired power. Current day and time settings are essential for the correct operation of the Chrono.

CONTROLS PROCEDURE
- Press key 6.
- Press 3 until CHRONO appears and confirm by pressing key 6.
- Press 3 until PRG 1-4 appears and confirm by pressing 6.
- Use keys 4 -5 to set the preferences.
- Press key 6 to confirm and key 1 to scroll back through the menus until the initial page.

| | | | | | |
|---|---|---|---|---|---|
| CHRONO | > | ENABLING | > | PRG 1 | *ON/OFF* | *Enable/disable PRG 1* |
| | | v | | PRG 2 | *ON/OFF* | *Enable/disable PRG 2* |
| | | v | | PRG 3 | *ON/OFF* | *Enable/disable PRG 3* |
| | | v | | PRG 4 | *ON/OFF* | *Enable/disable PRG 4* |
| | | v | | | | |
| | | CHRONO MODE | > | MANUAL/ SET TEMPERATURE / AUX | - | *Set CHRONO* mode |
| | | v | | | | |
| | | PRG1 | > | START PRG1 | *OFF-00:00-23:50* | *Ignition time PRG1* |
| | | v | | STOP PRG1 | *OFF-00:00-23:50* | *Switch-off time PRG1* |
| | | v | | MONDAY...SUNDAY | *ON/OFF* | *Enable/disable the days of PRG1* |
| | | v | | *SET PRG1 | *07- 37 °C* | *Set thermostat PRG1* |
| | | v | | POWER PRG1 | *1-5* | *Set power PRG1* |
| | | v | | | | |
| | | PRG2 | > | START PRG2 | *OFF-00:00-23:50* | *Ignition time PRG2* |
| | | v | | STOP PRG2 | *OFF-00:00-23:50* | *Switch-off time PRG2* |
| | | v | | MONDAY...SUNDAY | *ON/OFF* | *Enable/disable the days of PRG2* |
| | | v | | *SET PRG2 | *07- 37 °C* | *Set thermostat PRG2* |
| | | v | | POWER PRG2 | *1-5* | *Set power PRG2* |
| | | v | | | | |
| | | PRG3 | > | START PRG3 | *OFF-00:00-23:50* | *Ignition time PRG3* |
| | | v | | STOP PRG3 | *OFF-00:00-23:50* | *Switch-off time PRG3* |
| | | v | | MONDAY...SUNDAY | *ON/OFF* | *Enable/disable the days of PRG3* |
| | | v | | *SET PRG3 | *07- 37 °C* | *Set thermostat PRG3* |
| | | v | | POWER PRG3 | *1-5* | *Set power PRG3* |
| | | v | | | | |
| | | PRG4 | > | START PRG4 | *OFF-00:00-23:50* | *Ignition time PRG4* |
| | | | | STOP PRG4 | *OFF-00:00-23:50* | *Switch-off time PRG4* |
| | | | | MONDAY...SUNDAY | *ON/OFF* | *Enable/disable the days of PRG4* |
| | | | | *SET PRG4 | *07- 37 °C* | *Set thermostat PRG4* |
| | | | | POWER PRG4 | *1-5* | *Set power PRG4* |

******Only in AUTOMATIC* mode

**WHEN THE WEEKLY PROGRAMMER IS ACTIVE, THE RELATIVE ICON WILL BE SHOWN ON THE RADIO CONTROL DISPLAY**

| EXAMPLE CHRONO TIME SLOT | 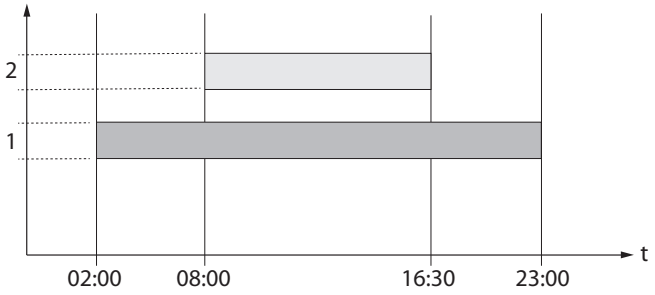 |
|---|---|



## MANUAL

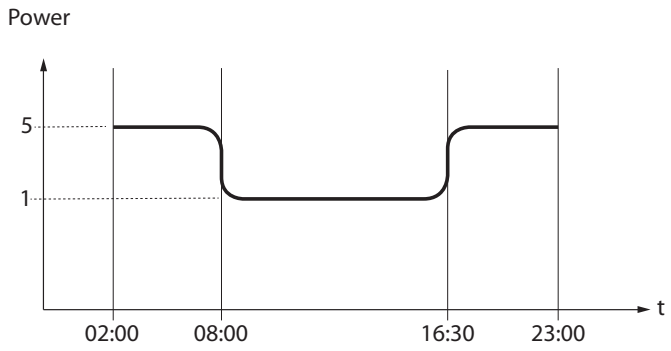



| | | | |
|---|---|---|---|
| | Time slot 1 | Start 02:00<br>Stop 23:00 | Power 5 |
| | Time slot 2 | Start 08:00<br>Stop 16:30 | Power 1 |
| | Stove setting | | |

## SET TEMPERATURE

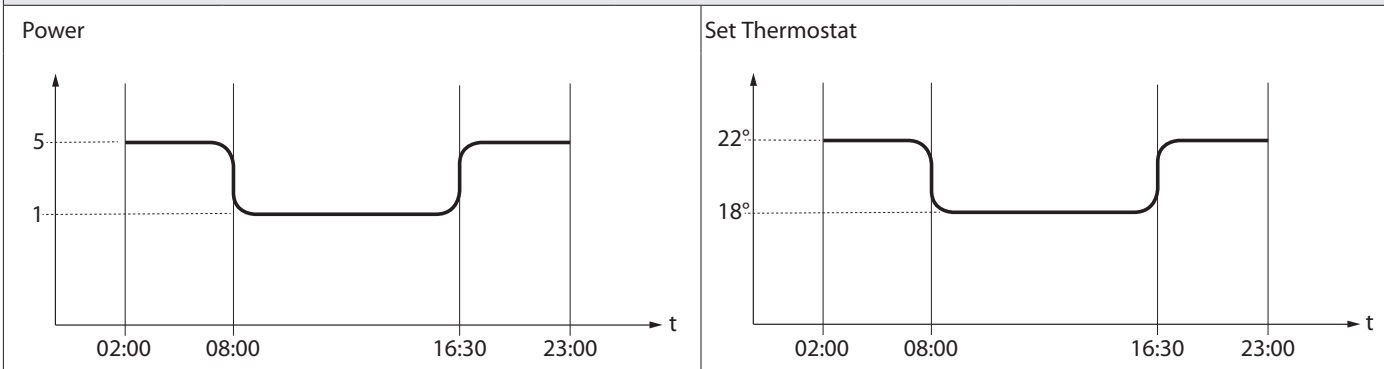



| | | | |
|---|---|---|---|
| | Time slot 1 | Start 02:00 - Stop 23:00 | Power 5 - set temp 22°C |
| | Time slot 2 | Start 08:00 - Stop 16:30 | Power 1 - set temp 18°C |
| | Stove setting | | |

## AUX

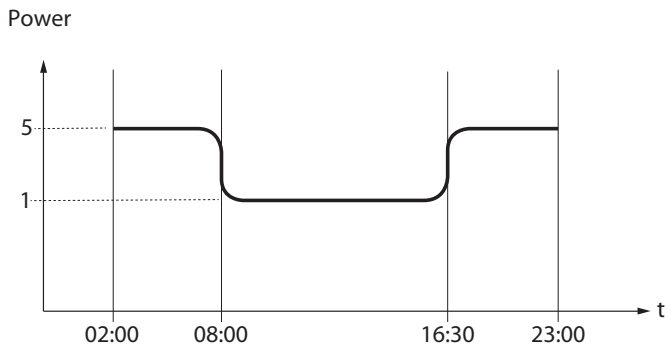



| | | | |
|---|---|---|---|
| | Time slot 1 | Start 02:00<br>Stop 23:00 | Power 5 |
| | Time slot 2 | Start 08:00<br>Stop 16:30 | Power 1 |
| | Stove setting if TA contact closed | | |

# SETTINGS

- DATE-TIME
- LANGUAGE
- DEGREES

*SEE CHAPTER: FIRST IGNITION SETTINGS*

## DISPLAY

This menu allows you to adjust the brightness of the display. The values range from OFF, 1 to 20. If set to OFF, the display backlighting is set to maximum brightness and turns off after a 60 second delay.
The backlighting can be turned on again by pressing any key or if the stove is in the alarm condition.

CONTROLS PROCEDURE
- Press key 6.
- Press key 3 until SETTINGS appears and confirm by pressing key 6.
- Keep pressing key 3 until DISPLAY appears and confirm by pressing key 6.
- Use keys 4-5 to set the desired intensity.
- Press key 6 to confirm and key 1 to scroll back through the menus until the initial page.

## STAND BY

The STAND BY function is used if the stove needs to be turned off immediately instead of a power modulation.

CONTROLS PROCEDURE
- Press key 6.
- Press key 3 until SETTINGS appears and confirm by pressing key 6.
- Keep pressing key 3 until STAND BY appears and confirm by pressing key 6.
- Use keys 4-5 to enable (**ON**) / disable (**OFF**).
- Press key 6 to confirm and key 1 to scroll back through the menus until the initial page.

**STAND BY FUNCTION SET TO ON**

If the STAND BY function is enabled (ON) and the room temperature exceeds the SET THERMOSTAT + DELTA T OFF value, then the stove switches off after a preset factory delay, and STAND BY will be displayed on the screen.
When the room temperature is lower than the SET THERMOSTAT - DELTA T ON value, and after a possible cooling time, the stove switches back on.

**STAND BY FUNCTION SET TO OFF (FACTORY SETTING)**

If the STAND BY function is not active (OFF), if the stove exceeds the set room temperature it will switch to the minimum value, modulating and displaying MODULATION. When the room temperature is lower than the SET THERMOSTAT the stove will restart at the set power and WORK will be displayed on the screen.

## OPERATION WITH ADDITIONAL THERMOSTAT (OPTIONAL)

**STAND BY FUNCTION SET TO OFF** (FACTORY SETTING)

If the STAND BY function is not active (OFF), if the stove exceeds the room temperature set on the additional thermostat (open contact) it will switch to the minimum value, displaying MODULATION. When the room temperature is lower than the set value on the additional thermostat (closed contact), the stove will resume operation at the set power, and WORK will be displayed on the screen.

**STAND BY FUNCTION SET TO ON**

When the STAND BY function is activated (ON), when the room temperature set on the additional thermostat is reached (open contact), the stove will switch off after a preset delay, and STAND BY will appear on the screen.
When the room temperature is less than the set temperature on the additional thermostat (closed contact), and after a certain cooling time, the stove ignites again.

**WHEN STAND BY AND AIR ZONE CONTROL ARE ACTIVE, THE GENERATOR IS SWITCHED OFF ONLY IF BOTH ROOMS (INSTALLATION, DUCTING) REACH THE SET TEMPERATURE.**

**FOR CORRECT OPERATION, SET TO AUX.**
**> SEE THE INSTALLATION CHAPTER SUPPLEMENTARY THERMOSTAT**

## DELTA-T

This function allows the hysteresis thresholds to be set for stove ignition (DELTA-T ON) and switch-off (DELTA-T OFF), used as a room temperature adjustment interval if not managed by an external thermostat.
The possible values for *DELTA-T* go from: *0.5 - 5°C*

CONTROLS PROCEDURE
- Press key 6.
- Press key 3 until SETTINGS appears and confirm by pressing key 6
- Press key 3 until DELTA-T appears and confirm by pressing key 6.
- Use keys 4-5 to set the desired value.
- Press key 6 to confirm and key 1 to scroll back through the menus until the initial page.

## FIRST LOAD

This function allows the auger to be filled, thus facilitating first stove ignition phases, or in the event the pellet hopper is empty. With the stove cold and "OFF", make sure the pellets have been introduced inside the hopper and activate the FIRST LOAD function, confirming by pressing OK.

**To stop the continuous loading, simply press 1 for 3 seconds.**

CONTROLS PROCEDURE
- Press key 6.
- press key 3 until SETTINGS appears and confirm by pressing key 6.
- Keep pressing key 3 until FIRST LOAD appears and confirm by pressing key 6.
- Use keys 4-5 to enable "ON" / disable "OFF"
- Press key 1 several times to confirm and exit the menu.

## CLEANING

This function facilitates the normal cleaning of the combustion chamber by activating the flue gas fan.
With the stove cold and switched "OFF", activate the CLEANING function.
The message "DO THE CLEANING" appears.
Open the fire door and, using the poker supplied, clean the combustion chamber.
When cleaning is complete, close the door and end the function.

CONTROLS PROCEDURE
- Press key 6
- Press key 3 until SETTINGS appears and confirm by pressing 6.
- Keep pressing key 3 until CLEANING appears and confirm by pressing 6.
- Clean the combustion chamber using the poker supplied.
- Press key 1 to end and wait for the main screen to reappear.

## RESET

Allows the user to reset all editable values to the default values.

CONTROLS PROCEDURE
- Press key 6.
- Press key 3 until SETTINGS appears and confirm by pressing key 6.
- Keep pressing 3 until RESET appears and confirm by pressing 6.
- Use keys 4-5 to enable "ON" / disable "OFF"
- Press key 1 several times to confirm and exit the menu.

## WI-FI

The display allows internet connection using Wi-Fi technology.
The entire Wi-Fi interface is grouped under the Settings -> W-Fi menu
The configuration must be made using the Total Control 3.0 App, which can be downloaded from Play Store or Apple Store.
*https://www.lanordica-extraflame.com*

- RESET

The setting allows you to reset the Wi-Fi to factory settings

CONTROLS PROCEDURE
- Press key 6.
- Press key 3 until SETTINGS appears and confirm by pressing key 6.
- Press key 3 until **Wi-Fi** appears and confirm by pressing key 6.
- Press key 3 until RESET appears and the press key 6.
- Use keys 4-5 to select start reset "ON" / "OFF" and press key 6 to confirm.
- Press key 1 several times to exit the menu.

- WPS

The setting allows for the WiFi module to be connected to the home router without having to enter the password. However, for correct operation, it is necessary to register the product via the Total Control 3.0 App.
Once the WPS is activated, the WiFi module will wait to receive the WiFi configuration directly from the home router. The router, which must be set up for this feature, usually has a WPS button to press.

CONTROLS PROCEDURE
- Press key 6.
- Press key 3 until SETTINGS appears and confirm by pressing key 6.
- Keep pressing 3 until **WI-FI** appears and confirm by pressing 6.
- Press key 3 until WPS appears and then press key 6.
- Use keys 4-5 to select start reset "ON" / "OFF" and press key 6 to confirm.
- Press key 1 several times to exit the menu.

- INFO

Three pieces of information about the Wi-Fi function are available in this menu.

To set: OK > *SETTINGS* > *WIFI* > *INFO*

CONTROLS PROCEDURE
- Press key 6.
- Press key 3 until SETTINGS appears and confirm by pressing key 6.
- Keep pressing 3 until **WI-FI** appears and confirm by pressing 6.
- Press key 3 until INFO appears and then press key 6.

- MAC: Unique identification code of the Wi-Fi device
- STATUS: WiFi module status; it can have the following values:
  - SERIAL KO: no communication between WiFi module and stove board
  - DISCONNECTED: The WiFi module is not configured for internet access
  - STATION OK: The WiFi module is connected to the home router, but has no access to the cloud (e.g. no Internet access, firewall issues)
  - CLOUD OK: The WiFi module is connected to the cloud

The firmware revision number of the WiFi module is also indicated.
- VERSION: the name of the firmware version of the WiFi module is indicated.
- RSSI: Wi-Fi signal strength, when it is correctly connected to an access point

*The RSSI value is expressed in decibels (dB) as a negative number which is typically in the range between -60dB (excellent signal) and -85dB (very poor signal). If the signal is poor, we recommend purchasing a Wi-Fi repeater to avoid any connectivity problems*

## OPERATION AND SOLUTIONS

The "WI-FI" icon itself, visible on the main page of the display, indicates the operating status of the stove's Wi-Fi connection
The table below shows how to interpret the information provided and the solutions to implement

| WIFI ICON STATUS | EXPLANATION | SOLUTION |
|---|---|---|
| "**WI-FI**" icon not present | Module off | Check the stove power supply<br>Contact the technical support service |
| "**WI-FI**" icon flashing | Connection in progress<br>*The module is attempting to make the connection to the home network selected.* | The module may take up to one minute to make the connection. If the problem persists, run a reset and reconfigure the product |
| "**WI-FI**" icon on | The product is connected to the server | - |

## EASY CONTROL

The function allows for two values to be set:

- **OFF** (disabled - factory default)
- **ON** (enabled)

Activation (EASY CONTROL = ON) is recommended in the event that there is an excessive formation of combustion residues in the flue during operation at reduced power (see FLUE EXHAUST chapter).

**Caution! It is advisable to activate the EASY CONTROL function under the supervision of a qualified technician.**

CONTROLS PROCEDURE
- Press key 6.
- Press key 3 until SETTINGS appears and confirm by pressing key 6.
- Keep pressing 3 until **EASY CONTROL** appears and confirm by pressing 6.
- Use keys 4-5 to enable "ON" / disable "OFF"
- Press key 1 several times to confirm and exit the menu.

# ADDITIONAL FUNCTIONS

## ADDITIONAL THERMOSTAT INSTALLATION (OPTIONAL)

The stove can control the room temperature through an additional thermostat (optional).
After ignition (by pressing key 6 or in chrono mode), the stove will work to reach the set value on the thermostat, displaying WORK (closed contact) on the screen. The standard room sensor is by-passed automatically.
When the thermostat temperature has been reached (open contact), the stove switches to minimum power level and displays MODULATION ON THE SCREEN.

CONTROLS PROCEDURE

- A mechanical or digital thermostat with a "normally open" input is required.
- Remove the plug from the socket.
- Using the figure as a reference, connect the two thermostat cables (clean contact - no 230 V!).
- Connect the power to the stove again.
- Set the SET MODE to AUX.

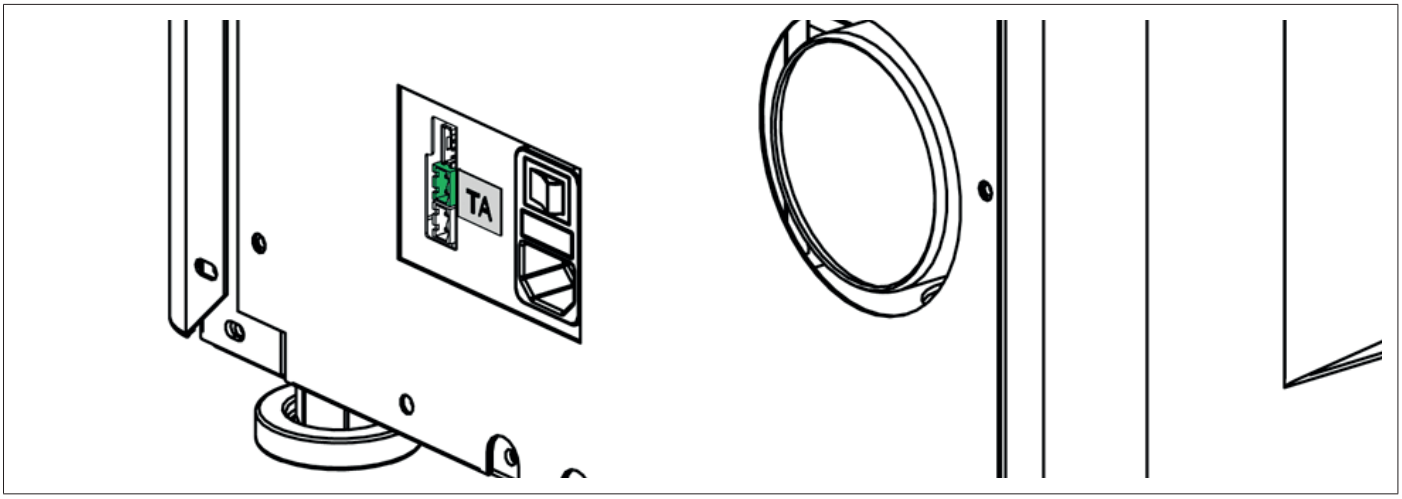


***PLEASE NOTE: THE TERMINAL CAN BE FOUND IN THE BAG INSIDE THE STOVE.***

**INSTALLATION MUST BE PERFORMED BY QUALIFIED STAFF AND/OR THE MANUFACTURER'S SERVICE TECHNICIANS**

## DELAY SWITCH-OFF

You can program a delayed switch-off for the stove. For example, if it is 8 pm and the delayed switch-off is set to 1h, the stove will automatically switch off at 9 pm.

If you press and hold keys 2 + 4 at the same time, the screen "DELAY SWITCH-OFF" will appear *(*this setting can only be configured if the stove is in the PREPARATION or WORK phase*)*.
Use keys 4 and 5 to increase/decrease the number of hours after which the stove will automatically start the final cleaning phase.
The number of hours range from OFF, 1 to 9.
Press P6 to confirm and return to the Home page.

One hour after the set switch-off time, the remaining operating time is indicated by displaying at one-minute intervals "switch off in" and the time "HOURS xx:xx".

**TO FIND OUT WHERE YOUR NEAREST SERVICE CENTRE IS, CONTACT YOUR DEALER OR VISIT THE WEBSITE:**
**WWW.LANORDICA-EXTRAFLAME.COM**

# CLEANING AND MAINTENANCE

**ALWAYS FOLLOW THE INSTRUCTIONS IN COMPLETE SAFETY!**

- Make sure that the power cord is unplugged because the generator may have been programmed to switch on.
- That the generator is cold all over.
- That the ashes are completely cold.
- Ensure efficient air exchange in the room during the product cleaning operations.
- Poor cleaning will compromise correct operation and safety!

# MAINTENANCE

For correct operation, the generator must undergo routine maintenance by a qualified technician, at least once a year.
The periodic inspection and maintenance operations must always be performed by specialised, qualified technicians, who operate in accordance with the laws in force and the instructions given in this use and maintenance manual.

**FUMES FROM BLOCKED FLUES ARE DANGEROUS!!**
**KEEP THE CHIMNEY AND FLUE CLEAR AND CLEAN IN ACCORDANCE WITH THE INSTRUCTIONS.**
**EVERY YEAR, HAVE THE FUME EXTRACTION SYSTEM, FLUE PIPES AND T-FITTINGS, INCLUDING THE INSPECTION CAPS, CLEANED. IF PRESENT, ALSO CLEAN THE ELBOWS AND HORIZONTAL SECTIONS!**
**THE GENERATOR CLEANING FREQUENCY IS INDICATIVE! IT DEPENDS ON THE QUALITY OF THE PELLETS AND FREQUENCY OF USE.**
**THESE OPERATIONS MAY SOMETIMES NEED TO BE PERFORMED MORE OFTEN**

# PERIODIC CLEANING UNDER USER'S RESPONSIBILITY

The periodic cleaning operations, as indicated in this use and maintenance manual, must be performed with the utmost care after reading the instructions, procedures and frequency described in this use and maintenance manual.

**CLEANING THE SURFACES AND COVERING**
**Never use abrasive or chemically aggressive detergents for cleaning!**
The surfaces must be cleaned when the generator and coating are completely cold. For the maintenance of the surfaces and metal parts, simply use a cloth dampened with water or water and neutral soap.
Failure to comply with these instructions may damage the surfaces of the generator and cause the invalidation of the warranty.

**CLEANING THE CERAMIC GLASS**
**Never use abrasive or chemically aggressive detergents for cleaning!**
The ceramic glass must be cleaned when the glass is completely cold.
To clean the ceramic glass, simply use a dry brush and some damp newspaper dipped in ash. If the glass is very dirty, use a specific cleaning agent for ceramic glass. Spray a small amount on a cloth and use it on the ceramic glass. Do not spray the cleaning agent or any other liquid directly on the glass or seals!

Failure to comply with these instructions may damage the surfaces of the generator and cause the invalidation of the warranty

**CLEANING THE PELLET HOPPER**
When the hopper is completely empty, disconnect the generator power cord, remove any residue (dust, debris, etc.) from the empty hopper before filling it up.

**THE PELLET HOPPER GASKETS, BURN POT AND FIRE DOOR GUARANTEE CORRECT STOVE OPERATION. THEY MUST BE PERIODICALLY CHECKED BY THE USER. IF THEY ARE WORN OR DAMAGED, DO NOT USE THE STOVE UNTIL THEY HAVE BEEN REPLACED.**
**THESE OPERATIONS MUST BE PERFORMED BY A QUALIFIED TECHNICIAN.**

**IF THE POWER CORD IS DAMAGED, IT MUST BE REPLACED BY THE SERVICE CENTRE OR BY A SIMILARLY QUALIFIED PERSON, SO AS TO AVOID ALL RISKS.**

## BURN POT AND COMBUSTION CHAMBER:

- Vacuum the residue in the burn pot
- Remove the burn pot completely from the relevant compartment;
- Vacuum the ash from the burn pot slot, ignition plug pipe holder and combustion chamber.
- Clear/clean all the holes in the burn pot.
- Re-position the burn pot in its slot and push it towards the fire wall.

***NOTE: Use a suitable ash vacuum cleaner with a special separate container for the collected ashes.***

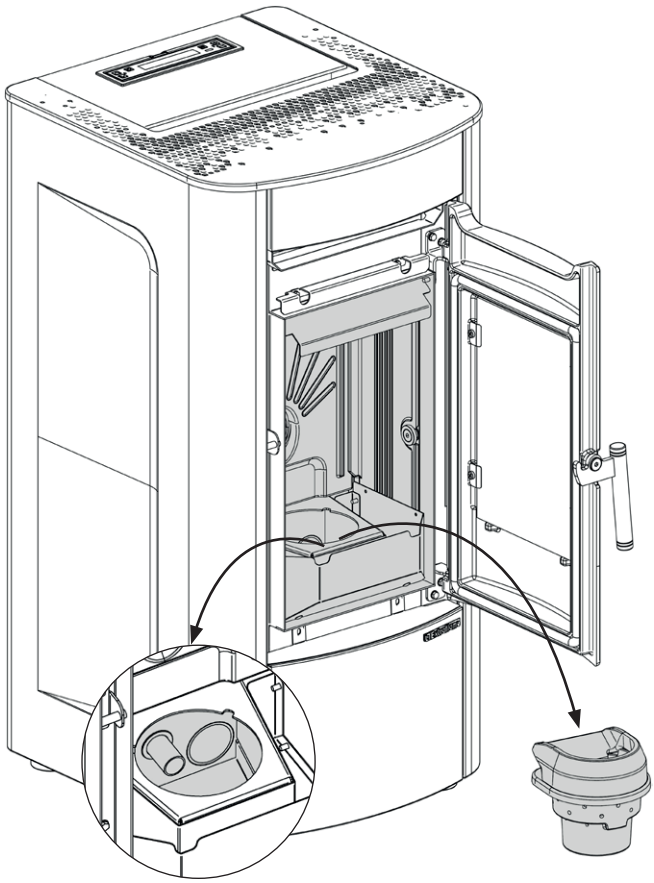

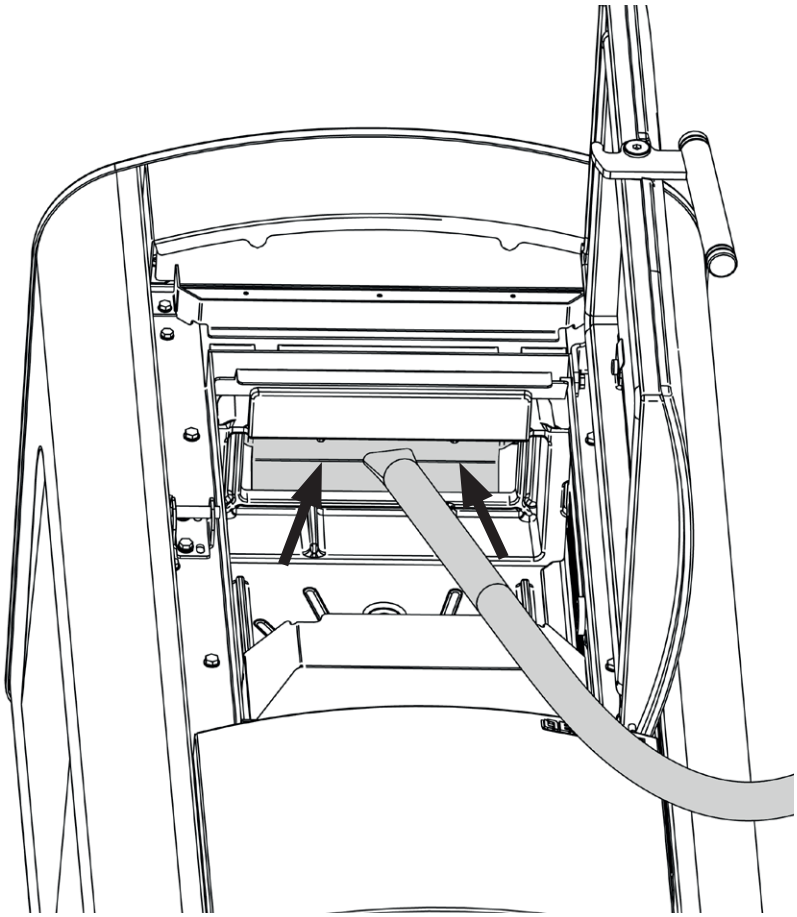

## REMOVABLE ASH DRAWER:

- Remove the ash drawer and empty it in a dedicated container.

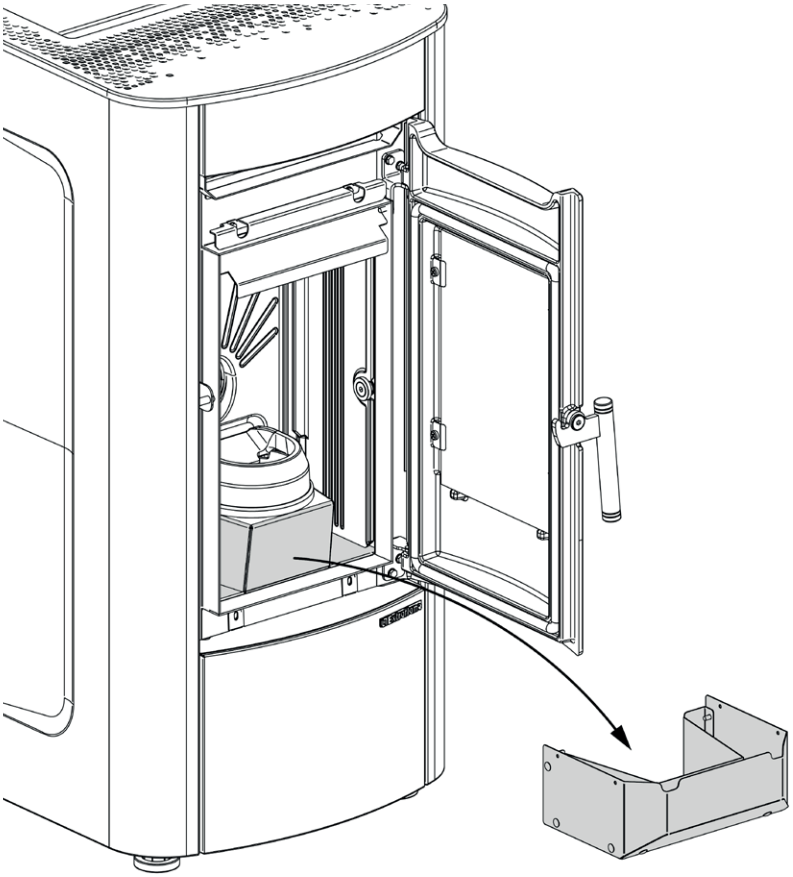

| PARTS | FREQUENCY IN DAYS* |
|---|---|
| BURN POT (USER) | 3 |
| COMBUSTION CHAMBER (USER) | 7 |
| REMOVABLE ASH DRAWER** (USER) | 3 |
| T-SHAPED FITTING / SMOKE DUCT (QUALIFIED TECHNICIAN) | 365 |

* Average use 8h at max. nominal power.

** How often the ash drawer is emptied depends on a number of factors: the type of pellets, the stove output, the use of the stove and the type of installation.

**A CLEAN BURN POT GUARANTEES CORRECT OPERATION!**

**BY KEEPING THE BURN POT AND ITS HOLES CONSTANTLY CLEAN AND FREE OF COMBUSTION RESIDUE, EXCELLENT COMBUSTION IS GUARANTEED OVER TIME, THUS PREVENTING ANY GENERATOR MALFUNCTIONS THAT MAY REQUIRE TECHNICAL ASSISTANCE.**

**THE "EASY SETUP" FUNCTION IN THE USER MENU CAN BE USED TO ADAPT COMBUSTION ACCORDING TO THE NEEDS DESCRIBED.**

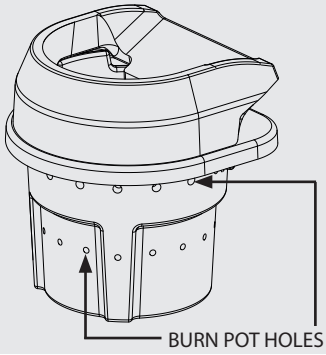

**TO FIND OUT WHERE YOUR NEAREST SERVICE CENTRE IS, CONTACT YOUR DEALER OR VISIT THE WEBSITE:**
**WWW.LANORDICA-EXTRAFLAME.COM**

# ROUTINE MAINTENANCE PERFORMED BY QUALIFIED TECHNICIANS

**Routine maintenance must be performed at least once a year.**
Since the generator uses pellets as solid fuel, it requires annual routine maintenance, which must be performed by a **Qualified technician, using only original spare parts.**
Failure to comply may jeopardise the safety of the appliance and invalidate the warranty conditions.
By observing the cleaning schedule reserved to the user described in the use and maintenance manual, the generator will be guaranteed correct combustion over time, thus preventing any faults and/or malfunctions which may require subsequent technical assistance. Requests for routine maintenance are not covered by the warranty.

**GASKETS, PELLET HOPPER LID, DOOR, ASH DRAWER AND BURN POT, INSPECTION OF SMOKE DUCTS**

The gaskets ensure the proper sealing of the stove and therefore its proper operation.
They must be periodically checked by the user. If they are worn or damaged, do not use the stove until they have been replaced.
These operations must be carried out by a qualified technician.

**CONNECTION TO THE FLUE**

Annually, or in any case each time the flue pipe needs to be vacuumed and cleaned. If there are horizontal sections, the residue must be removed to prevent it from obstructing the flow of fumes.

## SHUT-DOWN (END OF SEASON)

At the end of each season, before turning the stove off, it is advisable to completely empty the pellet hopper, removing any pellet residue and dust with a vacuum cleaner.
**Routine maintenance must be performed at least once a year.**

**TO FIND OUT WHERE YOUR NEAREST SERVICE CENTRE IS, CONTACT YOUR DEALER OR VISIT THE WEBSITE: WWW.LANORDICA-EXTRAFLAME.COM**

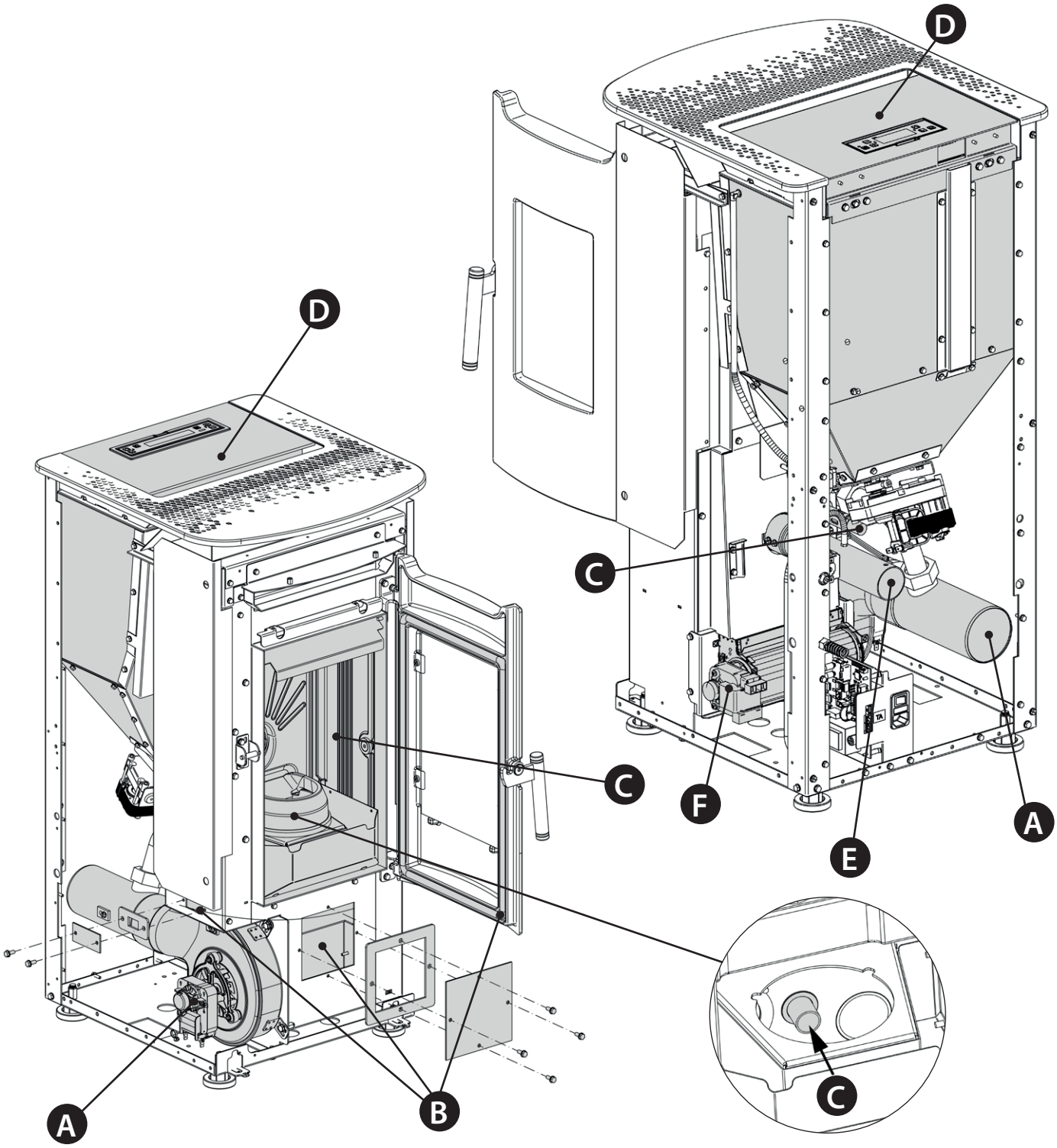


*THE IMAGES ARE FOR ILLUSTRATIVE PURPOSES.*

| | |
|---|---|
| **A** | Fumes motor (dismantle and clean the smoke duct and "T"), new seal where required |
| **B** | Gaskets, pellet hopper, inspections, ash drawer and door (replace and apply silicone where indicated) |
| **C** | Combustion chamber & exchanger (total cleaning) including cleaning the glow plug duct and EGR duct |
| **D** | Hopper (complete emptying and cleaning) |
| **E** | Check the air intake pipe and check/clean the mechanical pressure switch |
| **F** | Remove the room air fan and remove any dust and pellet residue. |

## DISPLAYS

| DISPLAY | REASON |
|---|---|
| OFF | Generator off |
| START | The start-up phase is in progress |
| PELLET LOADING | Continuous pellet loading is in progress during the ignition phase |
| IGNITION | The ignition phase is in progress |
| PREPARATION | The preparation phase is in progress |
| WORK | The normal work phase is in progress |
| MODULATION | The generator is working at minimum |
| FINAL CLEANING | The final cleaning is in progress |
| STAND-BY | Generator off waiting for re-ignition due to the external thermostat. |
| COOLING STAND BY | A new ignition is attempted when the generator has just been switched off. When the generator switches off, you must wait for the complete shutdown of the fumes motor, then clean the burn pot. The generator can only be re-ignited when these operations have been performed. |
| BLACK OUT STAND BY | The generator is cooling after a power cut.<br>Once cooling is completed, it will re-start automatically |
| AUTO BLOW | The automatic blow is active |
| CLOSE HOPPER-STOVE DOOR | This indication means that you have 60 seconds to close the hatch/door and the pellet lid.<br>Once 60 seconds have passed, during ignition the stove will go into "**DEPR ALARM**" mode, while during normal operation the stove will go into "**COOLING STAND BY**" mode before automatically resuming operation once the conditions are satisfied (cold stove, etc.). |
| CLOSE STOVE DOOR | This indication means that you have 60 seconds to close the hatch/door and the pellet lid.<br>Once 60 seconds have passed, during ignition the stove will go into "**DEPR ALARM**" mode, while during normal operation the stove will go into "**COOLING STAND BY**" mode before automatically resuming operation once the conditions are satisfied (cold stove, etc.). |
| CLOSE HOPPER | |
| MIN DELTA-P | The appliance detects abnormal conditions in the combustion air or flue gas outlet flows. |
| AIR ZONE CONTROL | This message, visible in the WORK phase, indicates that the appliance is optimising the distribution of hot air between the installation room and the ducted room. |

## ALARMS

| DISPLAY | EXPLANATION | SOLUTION |
|---|---|---|
| ⚠ | Indicates the presence of an alarm. | On: indicates the presence of an alarm<br>The alarm can only be reset if the fumes motor has stopped and 15 minutes have passed since the alarm was displayed, by pressing key ON/OFF for 3 seconds. |
| FUMES MOTOR FAULT | Fumes motor fault | Contact after-sales centre |
| FUMES PROBE | Fumes probe fault. | Contact after-sales centre |
| HOT FUMES | High fumes temperature | Check pellet feed (see "**EASY SETUP**"), if the problem cannot be solved, contact a qualified technician. |
| NO IGNITION | The pellet hopper is empty.<br>Pellet feed calibration inadequate.<br>Thermostat bulbs tripped. | Check for the presence of pellets in the hopper.<br>Adjust the pellet flow (see "**EASY SETUP**").<br>Check the procedures described in the "**IGNITION**" chapter.<br>Check bulb thermostats (see chapter on Resetting) |
| NO FLAME | The pellet hopper is empty.<br>No pellet feed.<br>The gearmotor does not feed pellets. | Check for the presence of pellets in the hopper.<br>Adjust the pellet flow (see "**EASY SETUP**").<br>*Check bulb thermostats (see chapter on Resetting) |
| DEPR ALARM | The door is not closed correctly.<br>The ash drawer is not closed correctly (if present) | Check hermetic door closure.<br>Check hermetic closure of the ash drawer (if present). |
| MIN DELTA-P ALARM 1 | The combustion chamber is dirty.<br>The fumes exhaust pipe is blocked/dirty<br>The vacuum detection channel inside the ash drawers is clogged.<br>The pellet hopper is empty. | Check cleanliness of the fumes pipe and the combustion chamber.<br>Check and clean the hose connection and the ash drawer pressure switch tube.<br>Contact the after-sales centre.<br>Check that the hopper is properly closed and the condition of the sealing gaskets. |

**IF PRESENT*

| | | |
|---|---|---|
| **NO IGNITION - BLACK OUT** | No power during the ignition phase. | Turn the stove off using key 6 and repeat the procedure described in the "**IGNITION**" chapter.<br>Other reset operations should be performed by an authorised technician. |
| **COMMAND AUGER ALARM** | Abnormal pellet loading. | Contact after-sales centre |
| **DELTA-P FAULT** | Differential pressure transducer faulty or disconnected. | Contact after-sales centre |
| **MIN DELTA-P ALARM 2** | The ash drawer is not closed correctly.<br>The air intake is clogged.<br>The combustion chamber is dirty.<br>The holes in the burn pot are clogged.<br>The heat exchanger and/or the fume pipe of the appliance are dirty.<br>The T-shaped fitting, the flue pipe or the chimney flue are clogged. | Check hermetic closure of the ash drawer.<br>Clean the air intake.<br>Clean the combustion chamber.<br>Clear the burn pot holes.<br>Clean the heat exchanger and the fume pipe of the appliance.<br>Clean/clear the T-shaped fitting, the flue pipe and the chimney flue.<br>Contact after-sales centre |

# DISPOSAL

## INFORMATION FOR MANAGEMENT OF ELECTRIC AND ELECTRONIC APPLIANCE WASTE CONTAINING BATTERIES OR ACCUMULATORS

This symbol, which is used on the product, batteries, accumulators or on the packaging or documents, means that at the end of its useful life, this product, the batteries and the accumulators included must not be collected, recycled or disposed of together with domestic waste.
Improper management of electric or electronic waste or batteries or accumulators can lead to the leakage of hazardous substances contained in the product. For the purpose of preventing damage to health or the environment, users are kindly asked to separate this equipment and/or batteries or accumulators included from other types of waste and to arrange for disposal by the municipal waste service It is possible to ask your local dealer to collect the waste electric or electronic appliance under the conditions and following the methods provided by national laws transposing the Directive 2012/19/EU.

Separate waste collection and recycling of unused electric and electronic equipment, batteries and accumulators helps to save natural resources and to guarantee that this waste is processed in a manner that is safe for health and the environment.
For more information about how to collect electric and electronic equipment and appliances, batteries and accumulators, please contact your local Council or Public Authority competent to issue the relevant permits.

| EN 16510-1 Symbol | EXPLANATION |
|---|---|
| nom | Nominal heat output |
| part | Part load heat output |
| CON / INT | Appliance operation, Continuos (CON) or Intermittent (INT) |
| $CO_{2\,nom} / CO_{2\,part}$ | Carbon dioxide emission |
| $CO_{nom} / CO_{part}$ | Carbon monoxide emission |
| $d_B$ | Minimum distances to combustible materials - bottom |
| $d_C$ | Minimum distances to combustible materials - ceiling |
| $d_F$ | Minimum distances to combustible materials - floor in front |
| $d_L$ | Minimum distances to combustible materials - side radiation area |
| $d_{non}$ | Minimum distances to non-combustible walls |
| $d_{out}$ | Flue gas exhaust pipe |
| $d_P$ | Minimum distances to adjacent combustible materials - front |
| $d_R$ | Minimum distances to combustible materials - rear |
| $d_S$ | Minimum distances to combustible materials - side |
| *E, f* | Power supply voltage, frequency |
| *EEI* | Energy Efficiency Index |
| $el_{max}$ | Consumption of electrical auxiliary energy at nominal heat output |
| $el_{min}$ | Consumption of electrical auxiliary energy at part load heat output |
| $el_{SB}$ | Consumption of electrical auxiliary energy at standby |
| *H* | Appliance height overall |
| *L* | Appliance depth overall |
| *m* | Net weight |
| $m_{chim}$ | Maximum load of a chimney the appliance max carry |
| $m_{h\,nom} / m_{h\,part}$ | Hourly consumption |
| $NO_{x\,nom} / NO_{x\,par}$ | Nitrogen oxides emission |
| $OGC_{nom} / OCG_{part}$ | Emission of organic gaseous carbon |
| $PM_{nom} / PM_{part}$ | Particulate matter emissions |
| $P_{nom} / P_{part}$ | Heat output |
| $p_{nom} / p_{part}$ | Minimum flue draught |
| $P_{SH\,nom} / P_{SH\,part}$ | Space heat output |
| $p_W$ | Permissible maximum water operating pressure |
| $P_{W\,nom} / P_{W\,part}$ | Water heat output |
| *s* | Thickness of the protective insulation material |
| $T_{class}$ | Chimney designation |
| $T_{f,g\,nom} / T_{f,g\,part}$ | Mean flue gas temperature |
| $T_{s\,nom} / T_{s\,part}$ | Flue gas outlet temperature |
| *W* | Appliance width overall |
| $W_{max}$ | Maximum electric power input |
| $\eta_{nom} / \eta_{part}$ | Efficiency |
| $\eta_S$ | Seasonal space heating efficiency at nominal heat output |
| $\Phi_{f,g\,nom} / \Phi_{f,g\,part}$ | Flue gas mass flow |
| *Wood Pellet (L)* | Wood Pellet |
| *Wood Logs (l)* | Wood Logs |
| | Read and follow the user operating instructions |

Extraflame®

Riscaldamento a Pellet

**EXTRAFLAME S.p.A.** Via Dell'Artigianato, 12 36030 - MONTECCHIO PRECALCINO (VI) - ITALY
☏ +39.0445.865911 - 🖷 +39.0445.865912 - ✉ info@extraflame.it - 💻 www.lanordica-extraflame.com

MADE IN ITALY
design & production

***TO FIND THE SERVICE CENTRE NEAREST TO YOU CONTACT YOUR DEALER OR CONSULT THE SITE WWW.LANORDICA-EXTRAFLAME.COM***

The manufacturer reserves the right to vary the characteristics and the data reported in this pamphlet at any moment and without notice, in order to improve its products.