Extraflame®

Riscaldamento a Pellet

UK

PELLET STOVES USER MANUAL

TERRY PLUS

MADE IN ITALY
design & production

004330050 - Rev 000

APPLY TECHNICAL
DATA LABEL

ATTENTION

SURFACES CAN BECOME VERY HOT!
ALWAYS USE PROTECTIVE GLOVES!

During combustion, thermal energy is released that significantly increases the heat of surfaces, doors, handles, controls, glass, exhaust pipes, and even the front of the appliance. Avoid contact with those elements if not wearing protective clothing (protective gloves included). Make sure children are aware of the danger and keep them away from the stove during operation.

ENGLISH **6**

WARNINGS **6**
SAFETY **6**
ROUTINE MAINTENANCE **8**
INSTALLATION **9**
HERMETICALLY SEALED INSTALLATION **12**
COMBUSTION AIR 12
FUMES EXHAUST SYSTEM 12
DETAILS TERRY PLUS **13**
DUCTING CHARACTERISTICS **14**
OPERATION OF DEFAULT DUCTING **14**
OPERATION OF DUCTING WITH THERMOSTAT OR PROBE (OPTIONAL) **14**
TA ADDITIONAL THERMOSTAT (OPTIONAL) **15**
FUSE 15
PELLETS AND LOADING **16**
PELLET HOPPER - PRESSURISED CLOSURE. **16**
RADIO/EMERGENCY CARD **17**
REMOTE CONTROL **18**
CONFIGURATION 18
REMOTE CONTROL ROOM PROBE CALIBRATION 18
BATTERY TYPE AND REPLACEMENT 18
REMOTE CONTROL FEATURES **19**
DISPLAY **20**
MAIN MENU **21**
GENERAL WARNINGS 22
SETTINGS FOR FIRST USE **22**
DATE/TIME **22**
LANGUAGE **22**
DEGREES **22**
OPERATION AND LOGIC **23**
FRONT AIR **24**
DUCTING 1 ..... **24**
DUCTING 2 ..... **24**
EASY SETUP **24**
CHRONO **25**
ENABLING **25**
PRG 1-4 ..... **25**
CHRONO CAN1 ..... **27**
ENABLING **27**
PRG 1-4 ..... **27**
CHRONO CAN2 ..... **27**
SETTINGS **28**
DISPLAY **28**
STAND-BY **28**
OPERATION WITH ADDITIONAL THERMOSTAT (OPTIONAL) 28
FIRST LOAD **29**
DELTA T **29**
RESET **29**
DEPR WARNING **29**
CLEANING AND MAINTENANCE **30**
MAINTENANCE **30**
PERIODIC CLEANING UNDER USER'S RESPONSIBILITY 30
ROUTINE MAINTENANCE PERFORMED BY QUALIFIED TECHNICIANS **32**
SHUT-DOWN (END OF SEASON) 32
DISPLAYS **36**
ALARMS **37**
DISPOSAL **38**
SYMBOL EN 16510-1 ..... **39**

ATTENZIONE TASSATIVO **PRIMA DI MOVIMENTARE LA STUFA TOGLIERE LE MAIOLICHE INDICATE PER EVITARE DANNI.** **PER L'ALLINEAMENTO DEL TOP UTILIZZARE LE 2 VITI.**	**ATENÇÃO - OBRIGATÓRIO** **ANTES DE MOVIMENTAR A SALAMANDRA, RETIRAR AS CERÂMICAS INDICADAS PARA EVITAR DANOS.** **PARA O ALINHAMENTO SUPERIOR USE 2 PARAFUSOS.**
ATTENTION - COMPULSORY **BEFORE MOVING THE STOVE, KINDLY TAKE THE CERAMICS OFF IN ORDER TO AVOID ANY DAMAGES.** **USE THE 2 SCREWS TO ALIGN THE TOP PART**	**TÄHELEPANU!** **ENNE AHJU LIIGUTAMIST EEMALDAGE SELLELT NÄIDATUD KERAAMILISED OSAD, ET VÄLTIDA KAHJUSTUSI.** **TOPI JOONDAMISEKS KASUTAGE 2 KRUVI.**
ATTENTION - OBLIGATOIRE **AVANT DE BOUGER LE POÊLE , FAIRE ATTENTION À LEVER LES CÉRAMIQUES INDIQUÉES POUR ÉVITER DES DÉGÂTS.** **POUR L'ALIGNEMENT DU TOP, UTILISER LES 2 VIS**	**OBVEZNA POZORNOST** **PRIJE POMICANJA PEĆI, UKLONITE OZNAČENE PLOČICE KAKO BISTE IZBJEGLI OŠTEĆENJA.** **ZA PORAVNANJE GORNJEG DIJELA KORISTITI 2 VIJKA.**
VORSICHT - OBLIGATORISCH **BEVOR SIE DEN OFEN BEWEGEN, BITTE UNBEDINGT DIE BEZEICHNETE KERAMIK KACHELN ENTFERNEN UM SCHÄDEN ZU VERMEIDEN.** **VERWENDEN SIE DIE 2 SCHRAUBEN, UM DAS OBERE VERKLEIDUNGSSTÜCK ANZUGLEICHEN**	**POZOR OBVEZNO** **PRED PREMIKANJEM PEČI ODSTRANITE OZNAČENE MAJOLIKE, DA PREPREČITE POŠKODOVANJE.** **ZA PORAVNAVO VRHA UPORABITE 2 VIJAKA.**
ATENCIÓN - PERENTORIO **ANTES DE MOVER LA ESTUFA SACAR LAS MAYÓLICAS INDICADAS PARA EVITAR DAÑOS.** **PARA EL ALINEAMIENTO DE LA TAPA , UTILIZAR LOS 2 TORNILLOS**	**ADVARSEL - OBLIGATORISK** **FØR DU FLYTTER OVNEN, BØR DU TAGE KERAMIKFLISERNE AF FOR AT UNDGÅ SKADER.** **TIL JUSTERING AF TOPPEN BRUG DE 2 SKRUER.**

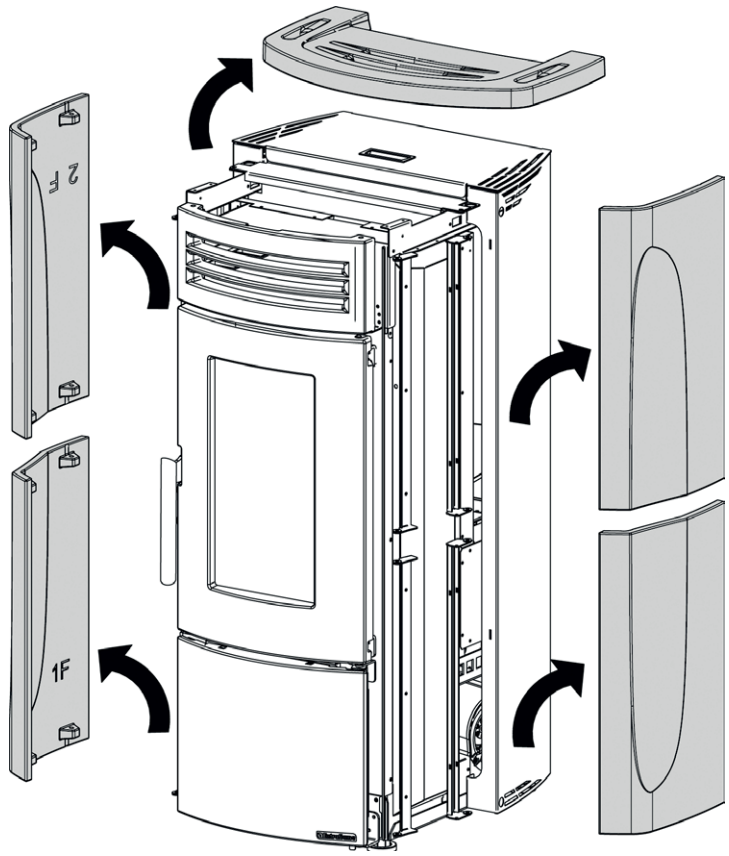

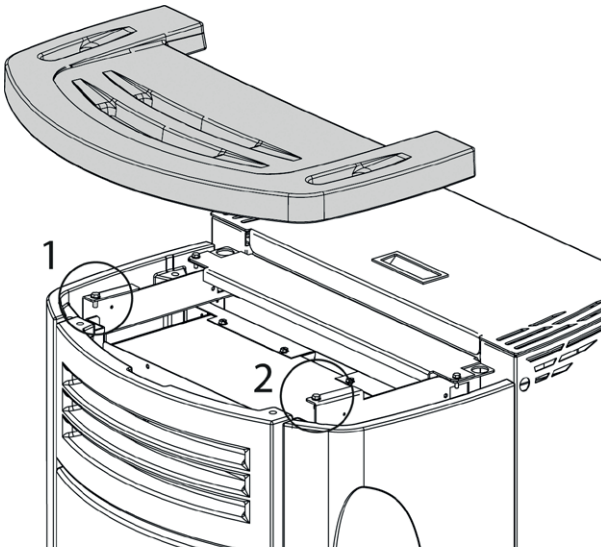

Silicone

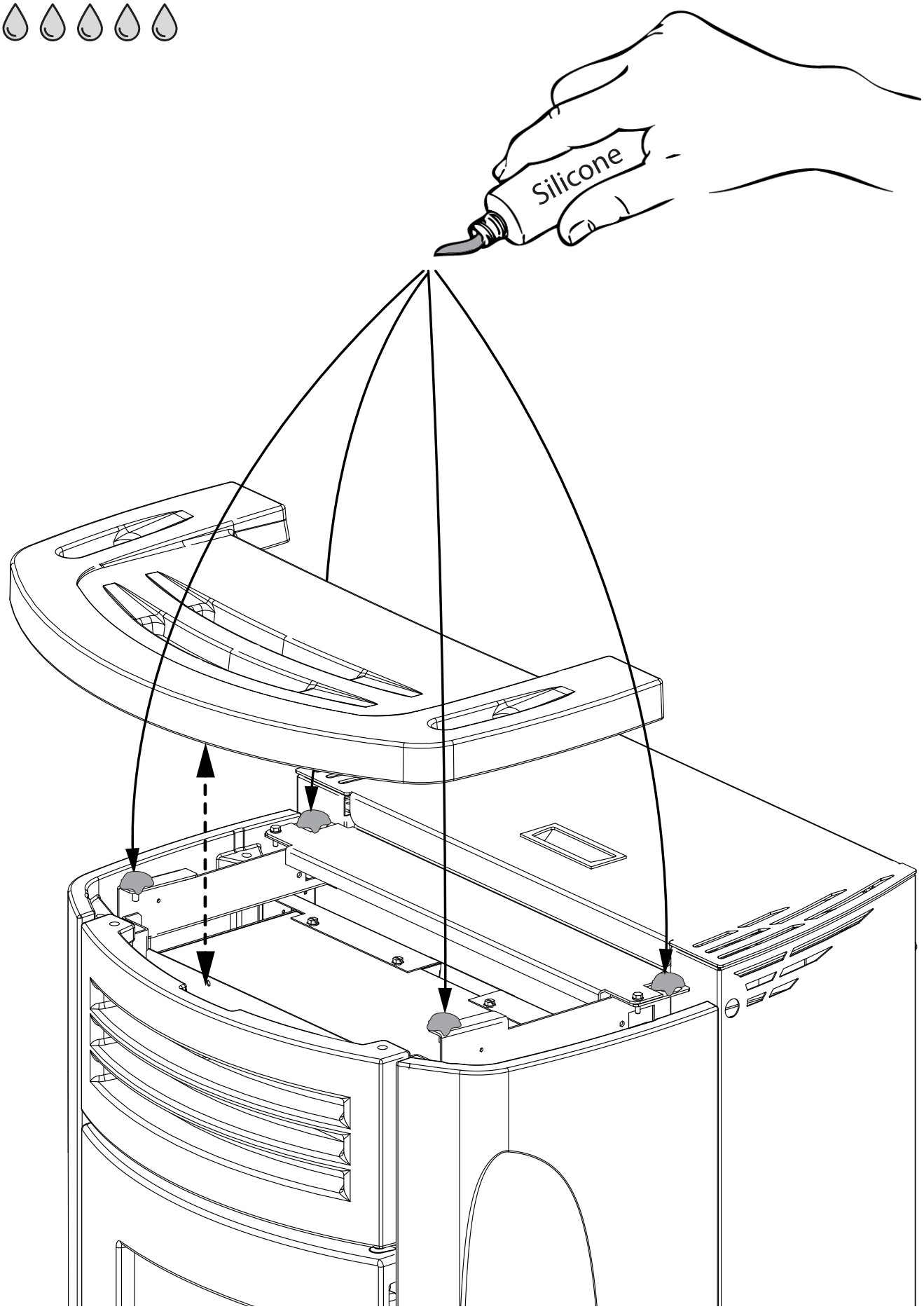

We thank you for having chosen our company; our product is a great heating solution developed from the most advanced technology with top quality machining and modern design, aimed at making you enjoy the fantastic sensation that the heat of a flame gives, in complete safety.

WARNINGS

This instructions manual is an integral part of the product: make sure that it always accompanies the appliance, even if transferred to another owner or user, or if transferred to another place. If it is damaged or lost, request another copy from the area technician. This product is intended for the use for which it has been expressly designed. The manufacturer is exempt from any liability, contractual and extracontractual, for injury/damage caused to persons/animals and objects, due to installation, adjustment and maintenance errors and improper use.
Installation must be performed by qualified staff, which assumes complete responsibility for the definitive installation and consequent good functioning of the product installed. One must also bear in mind all laws and national, regional, provincial and town council Standards present in the country in which the appliance has been installed, as well as the instructions contained in this manual.
The use of the appliance must comply with all local, regional, national and European regulations.
The Manufacturer cannot be held responsible for the failure to comply with such precautions.
After removing the packaging, ensure that the content is intact and complete. Otherwise, contact the dealer where the appliance was purchased.
All electric components that make up the product must be replaced with original spare parts exclusively by an authorised after-sales centre, thus guaranteeing correct functioning.

SAFETY

- **THE APPLIANCE MAY BE USED BY CHILDREN 8 YEARS OF AGE OR OLDER AND INDIVIDUALS WITH REDUCED PHYSICAL, SENSORY, OR MENTAL CAPACITIES OR WITHOUT EXPERIENCE OR THE NECESSARY KNOWLEDGE, PROVIDED THAT THEY ARE SUPERVISED OR HAVE**

RECEIVED INSTRUCTIONS ON SAFE USE OF THE APPLIANCE AND THAT THEY UNDERSTAND THE INHERENT DANGERS.

- THE GENERATOR MUST NOT BE USED BY PERSONS (INCLUDING CHILDREN) WITH REDUCED PHYSICAL, SENSORY AND MENTAL CAPACITIES OR WHO ARE UNSKILLED PERSONS, UNLESS THEY ARE SUPERVISED AND TRAINED REGARDING USE OF THE APPLIANCE BY A PERSON RESPONSIBLE FOR THEIR SAFETY.
- THE CLEANING AND MAINTENANCE REQUIRED BY THE USER MUST NOT BE PERFORMED BY CHILDREN WITHOUT SUPERVISION.
- CHILDREN MUST BE CHECKED TO ENSURE THAT THEY DO NOT PLAY WITH THE APPLIANCE.
- DO NOT TOUCH THE GENERATOR WHEN YOU ARE BAREFOOT OR WHEN PARTS OF THE BODY ARE WET OR DAMP.
- IT IS FORBIDDEN TO MODIFY THE APPLIANCE IN ANY WAY.
- DO NOT PULL, REMOVE, TWIST THE ELECTRICAL CABLES COMING OUT OF THE PRODUCT EVEN IF IT IS DISCONNECTED FROM THE MAINS.
- IT IS ADVISED TO POSITION THE POWER SUPPLY CABLE SO THAT IT DOES NOT COME INTO CONTACT WITH HOT PARTS OF THE APPLIANCE.
- THE POWER SUPPLY PLUG MUST BE ACCESSIBLE AFTER INSTALLATION.
- DO NOT CLOSE OR REDUCE THE DIMENSIONS OF THE AIRING VENTS IN THE PLACE OF INSTALLATION. THE AIRING VENTS ARE ESSENTIAL FOR CORRECT COMBUSTION.
- THE COMBUSTION CHAMBER DOOR MUST ALWAYS BE CLOSED WHEN THE STOVE IS OPERATING AND MUST ONLY BE OPENED TO ADD FUEL, LIGHT AND CLEAN IT.
- THE HEARTH DOOR MUST ALWAYS BE CLOSED DURING NORMAL FUNCTIONING OF THE PRODUCT.
- WHEN THE APPLIANCE IS FUNCTIONING AND HOT TO THE TOUCH, ESPECIALLY ALL EXTERNAL SURFACES, ATTENTION MUST BE PAID
- CHECK FOR THE PRESENCE OF ANY OBSTRUCTIONS BEFORE SWITCHING THE APPLIANCE ON FOLLOWING A PROLONGED PERIOD OF INACTIVITY.
- THE GENERATOR HAS BEEN DESIGNED TO ADJUST ITSELF AUTOMATICALLY IN PARTICULAR OPERATING CONDITIONS
- THE GENERATOR HAS BEEN DESIGNED TO FUNCTION IN ANY CLIMATIC CONDITION. IN PARTICULARLY ADVERSE CONDITIONS (STRONG WIND, FREEZING) SAFETY SYSTEMS MAY INTERVENE

THAT SWITCH THE GENERATOR OFF. IF THIS OCCURS, CONTACT THE TECHNICAL AFTER-SALES SERVICE AND ALWAYS DISABLE THE SAFETY SYSTEMS.

- **IN THE EVENT THE FLUE CATCHES FIRE, USE SUITABLE SYSTEMS FOR SUFFOCATING THE FLAMES OR REQUEST HELP FROM THE FIRE BRIGADE.**
- **THIS APPLIANCE MUST NOT BE USED TO BURN WASTE**
- **NEVER USE PETROL, KEROSENE, LIGHTER FUEL, ETHANOL OR SIMILAR LIQUIDS TO START OR "RELIGHT" THE GENERATOR.**
- **DURING THE FILLING PHASE DO NOT PUT THE BAG OF PELLETS TO INTO CONTACT WITH THE PRODUCT**
- **THE MAJOLICAS ARE TOP QUALITY ARTISAN PRODUCTS AND AS SUCH CAN HAVE MICRO-DOTS, CRACKLES AND CHROMATIC IMPERFECTIONS. THESE FEATURES HIGHLIGHT THEIR VALUABLE NATURE. DUE TO THEIR DIFFERENT DILATION COEFFICIENT, THEY PRODUCE CRACKLING, WHICH DEMONSTRATE THEIR EFFECTIVE AUTHENTICITY. TO CLEAN THE MAJOLICAS, IT IS RECOMMENDED TO USE A SOFT, DRY CLOTH. IF A DETERGENT OR LIQUID IS USED, THE LATTER COULD PENETRATE INSIDE THE CRACKLES, HIGHLIGHTING THEM.**
- **SINCE THE PRODUCT CAN TURN ON AUTOMATICALLY THANKS TO THE TIMER, OR REMOTELY USING THE DEDICATED APPLICATIONS, IT IS STRICTLY FORBIDDEN TO LEAVE ANY COMBUSTIBLE OBJECT WITHIN THE SAFETY DISTANCES INDICATED ON THE TECHNICAL DATA PLATE.**
- **INTERNAL COMBUSTION CHAMBER PARTS CAN BE SUBJECT TO EXTETICAL WARN, IT DOESN'T AFFECT THE FUNCTIONALITY**

ROUTINE MAINTENANCE

Based on Decree 22 January 2008 n°37 art.2, routine maintenance means interventions aimed at reducing degradation due to normal use, as well as dealing with accidental events entailing the need of first interventions, which however do not modify the structure of the system upon which one is intervening or its intended use according to the requirements laid down by the technical standards in force and by the manufacturer's use and maintenance manual.

INSTALLATION

GENERAL

The support surfaces and/or points must have a suitable load-bearing capacity to support the weight of the appliance, of the accessories and coatings. The generator must be on the level for correct operation.
The flue extraction and hydraulic connections must be carried out by qualified personnel who must issue documentation of conformity according to the regulations of the country of installation.
The installer must give the owner or their representative, the declaration of system conformity, in accordance with current legislation, including:

1) the use and maintenance manual of the appliance and of the system components (such as for example, the smoke ducts, chimney, etc.);
2) photocopy or photograph of the chimney plaque;
3) system booklet (where applicable).

The installer must ask to be issued with a receipt stating that the documentation has been provided, and must keep it with a copy of the technical documentation relating to the installation.
If installed in a condominium, the administrator must be consulted beforehand.
If necessary, check the exhaust fume emissions after installation. Any inspection point included should be watertight.

COMPATIBILITY
Installation in premises with fire hazards is forbidden. Installation in residential premises where the following situations occur is also prohibited:

1. where there are liquid fuel-operated appliances with continuous or intermittent operation, which draw the combustion air in the room in which they are installed.
2. where there are type B gas appliances intended for room heating, with or without production of DHW and in adjacent and adjoining premises.
3. where, in any case, the pressure difference measured during installation between the internal and external environment is greater than 4 Pa.

N.B.: Watertight appliances can also be installed in the cases indicated by points 1, 2 and 3 of this paragraph.

INSTALLATIONS IN BATHROOMS, BEDROOMS AND STUDIO FLATS
Installation in bathrooms, bedrooms and studio flats is only allowed for sealed or closed hearth appliances with ducted combustion air taken from the outside.

MINIMUM DISTANCES FROM COMBUSTIBLE MATERIALS

Installation next to combustible or heat-sensitive materials is permitted, **provided that suitable safety distances are maintained, as specified in the CEMI (CE Marking Information), the Declaration of Performance (DoP) and the label at the beginning of the manual (page 2)**.
We suggest using non-combustible material for the side and rear walls and support surface on the floor.
If the floor is made of combustible material, it is recommended to use a non-combustible protective layer, which must cover the area under the appliance and extend forward by at least the distance specified as d_F.
For installation near non-flammable materials, a minimum side and rear clearance must be maintained, as indicated by the distance marked d_{non}.
For products with rear spacers, installation flush with the wall is allowed <u>at the rear only</u>.

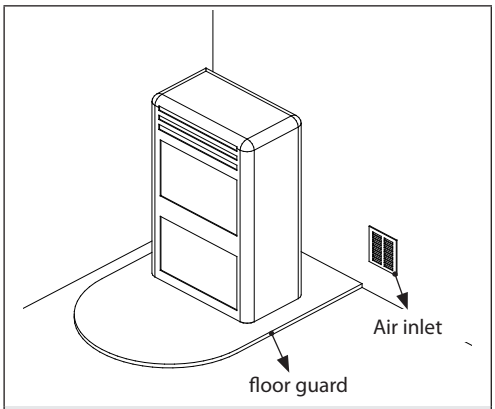

One must also bear in mind all laws and national, regional, provincial and town council standards present in the country in which the appliance has been installed, as well as the instructions in this manual.

MAINTENANCE PREPARATION

It might be necessary to place the product away from adjacent walls for maintenance operations. This operation must be carried out by a technician who is qualified to disconnect the flue gas evacuation ducts and subsequent connection. For generators connected to the plumbing system, a connection must be provided between the system and the stove that allows the generator to be moved at least 1 metre away from adjacent walls during extraordinary maintenance work performed by a qualified technician

INSTALLATION OF INSERTS

When installing inserts, it is necessary to prevent access to the internal parts of the appliance, and when removing them, it must not be possible to access live parts.
Any wiring, such as the power cable or room probes, must be positioned in such a way that they are not damaged when the insert is moved and do not come into contact with hot parts. If a cavity made of combustible material is installed, it is advisable to take all the safety precautions indicated in the installation regulations

VENTILATION AND AERATION OF THE INSTALLATION PREMISES

Ventilation, in the case of a non-watertight generator and/or non-watertight installation, must be carried out respecting the minimum area indicated below (considering the largest of the values suggested:

Appliance categories	Reference standard	Percentage of the net opening section with respect to the appliance fumes outlet section	Minimum net opening value of the ventilation duct
Pellet stoves	EN 16510-1; EN 16510-2-6	-	80 cm^2
Boilers	EN 303-5	50%	100 cm^2

The difference in pressure between the generator installation rooms and the exterior must always be ≥ -4 Pa under any condition (e.g. -3 Pa is an acceptable value), including in the presence of extraction hoods and/or controlled forced ventilation systems
The air inlets must meet the following requirements:

- They must be protected with grids, metal mesh, etc., but without reducing the net useful section;
- They must be made so as to make the maintenance operations possible;
- Positioned so that they cannot be obstructed;

The inflow of clean, uncontaminated air can also be obtained from a room next to the installation room (indirect ventilation and aeration) as long as this flow can occur freely through permanent openings communicating with the outside.
The adjacent room cannot be used as a garage, warehouse of combustible material or for any other activity with a fire hazard, bathroom, bedroom or common room of the building.

FLUE DISCHARGE

The heat generator works under a vacuum and is fitted with an outlet fan for fumes extraction. The exhaust system must be used by the generator only. No flue discharges shared with other devices are allowed.

The components of the flue gas evacuation system for combustion products must be chosen and sized in accordance with current regulations, depending on the specific situation at the place of installation.
The following checks are recommended:

- The flue system must be assessed in accordance with the following technical standards (where applicable): EN 15287-1, EN 15287-2, EN 13063-1, EN 13063-2, EN 1457, EN 1806, EN 1856-1, EN 1856-2 and EN 13384-1;
- The correct operation of the flue system must be checked in accordance with the EN 13384-2 Standard based on the specific
- situation at the place of installation;
- The installation of watertight appliances must also take the EN 13063-3 and EN 14989-2 standards into account;
- The components of the flue gas evacuation system for combustion products must be chosen and sized in accordance with current regulations, depending on the specific situation at the place of installation.
- The following checks are recommended:
- The flue system must be assessed in accordance with the following technical standards (where applicable): EN 15287-1, EN 15287-2, EN 13063-1, EN 13063-2, EN 1457, EN 1806, EN 1856-1, EN 1856-2 and EN 13384-1;
- The correct operation of the flue system must be checked in accordance with the EN 13384-2 standard based on the specific situation at the place of installation;
- The installation of watertight appliances must also take the EN 13063-3 and EN 14989-2 standards into account;
- The length of the horizontal section should be minimal and, in any case, no longer than 2 metres, with a minimum upward gradient of 3%
- The number of direction changes including the one due to the use of the "T" element must not be more than 4.
- A "T" fitting with a condensation collection cap must be included at the base of the vertical section.
- The vertical pipe can be on the inside or outside of the building. If the flue is fitted in an existing chimney, it must be certified for solid fuels.
- If the flue is outside the building, it must always be insulated.
- The flue must have at least one sealed outlet for possible fume sampling.
- All the sections of the flue pipe must be accessible for inspection.
- Inspection openings must be included for cleaning.

If metal pipes are used, they must comply with the following requirements (EN 1856-1 and EN1856-2):

- Flue - Temperature class, (as indicated in the technical data sheet) soot fire resistance
- Flue pipe - Temperature class, at least T250, Pressure class, P1 (not indicated in the technical datasheet)

CHIMNEY COWL

The chimney caps must meet the following requirements:

- they must have a useful outlet section no less than double of that of the chimney/ducted system on which it is installed;
- they must be adapted in order to prevent the penetration of rain and snow in the chimney/ducted system;
- they must be built so that, in the event of winds coming from all directions and from any angle, the expulsion of combustion products is in any case ensured;

SHARED CHIMNEY FLUE

Check on the CE Technical Data Sheet whether the product is suitable for installation in a shared chimney flue (i.e. with multiple connection).

Suitable devices can be installed in shared flue systems provided that:
- installation in a shared chimney flue (i.e. with multiple connection) is allowed in the place of installation;
- the requirements of national and regional Standards are strictly complied with [for GERMANY, for example, DIN EN 13384-2, DIN V 18160-1, DIN 18896 and MFeuV-2007 (Muster-Feuerungsverordnung)];
- the installer or district chimney sweep has inspected and approved the installation conditions.

Please also remember the following indications, which the end user must comply with:
- The device can be operated only with the doors closed.
- The doors and all setting devices must remain closed when the device is not on (except for cleaning and maintenance operations).

EXAMPLES OF CORRECT CONNECTION TO THE CHIMNEY

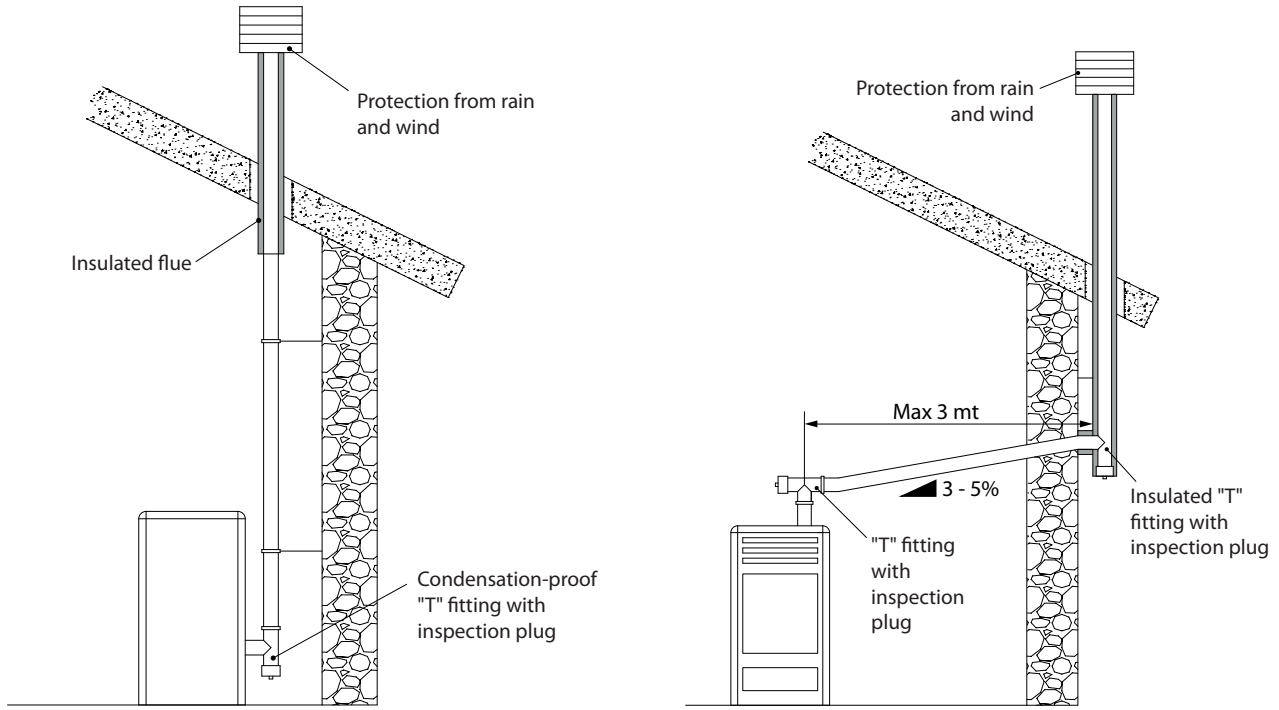

CONNECTION TO THE ELECTRICITY GRID

The generator is supplied with a power cable for connection to a 230V 50 Hz socket, possibly with a circuit breaker. The power socket must be easily accessible.
The electrical system must be compliant; check the efficiency of the grounding circuit in particular. Inadequate grounding of the system can cause a malfunction for which the manufacturer is not responsible.
Power fluctuations over 10% may cause product malfunctions.

HERMETICALLY SEALED INSTALLATION

The generator is a fully sealed product with respect to the environment in which it is installed. This means that it is ideal for passive houses because it does not take air in from within the house.

COMBUSTION AIR

To ensure the stove remains hermetically sealed, the connection pipe for the combustion air must be directly connected to the exterior, using special pipes and sealed connectors.

FUMES EXHAUST SYSTEM

- If the generator has a fumes temperature of less than 160°C+ room temperature due to the high performance (refer to technical data), the fumes exhaust system must be completely waterproof.
- If there is a possibility that fumes may condense, an external inspection hatch must be fitted.

INSTALLATION EXAMPLE

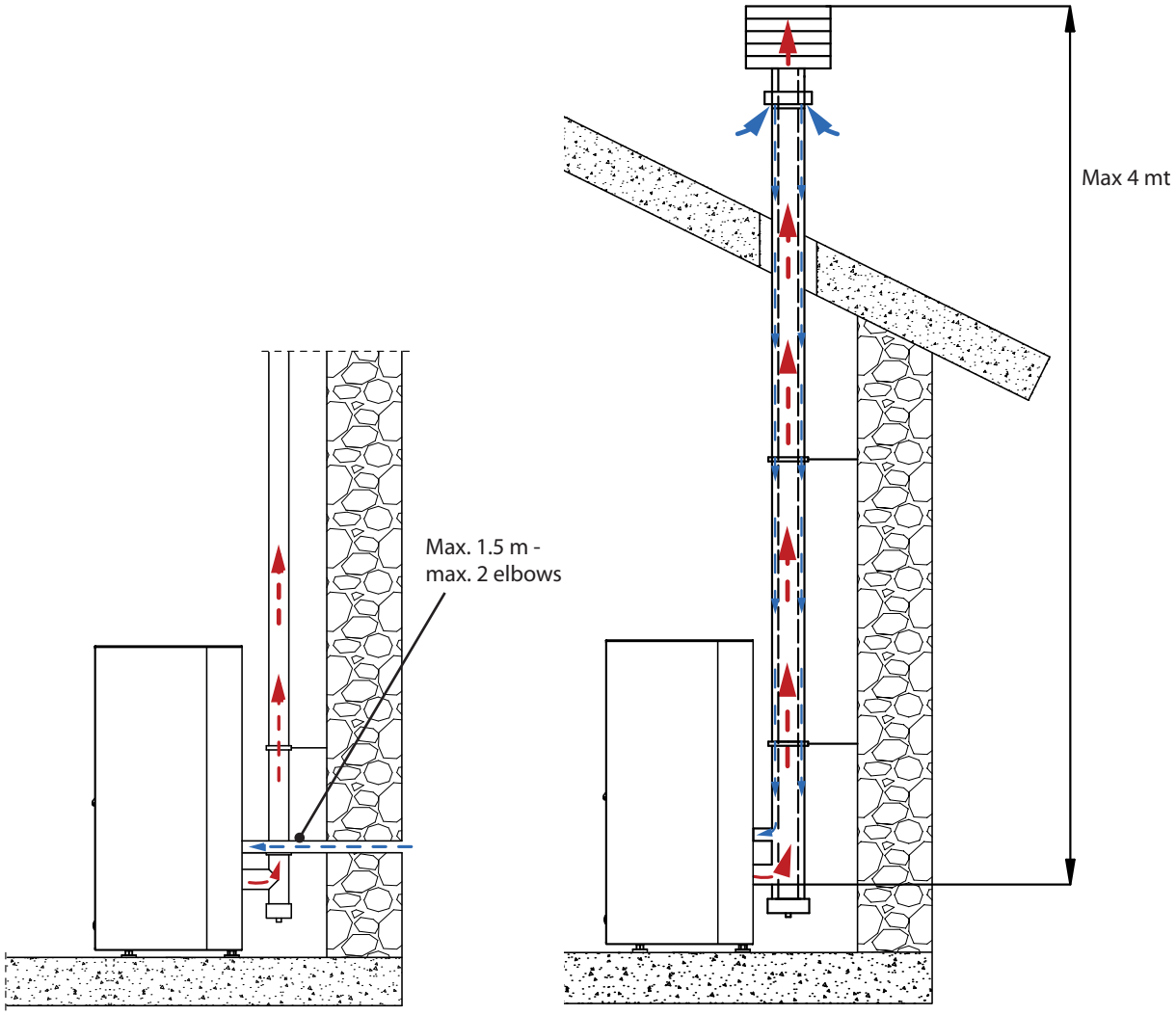

One must also bear in mind all laws and national, regional, provincial and town council regulations in force in the country in which the appliance has been installed, as well as the instructions contained in this manual.

DETAILS TERRY PLUS

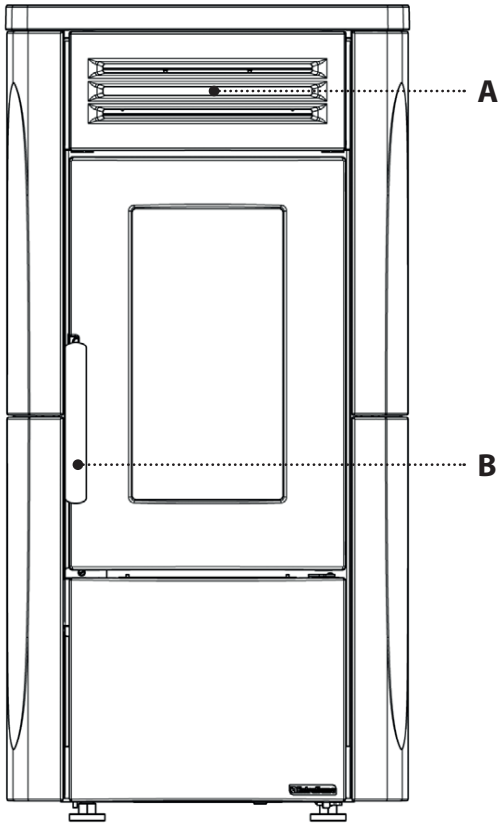

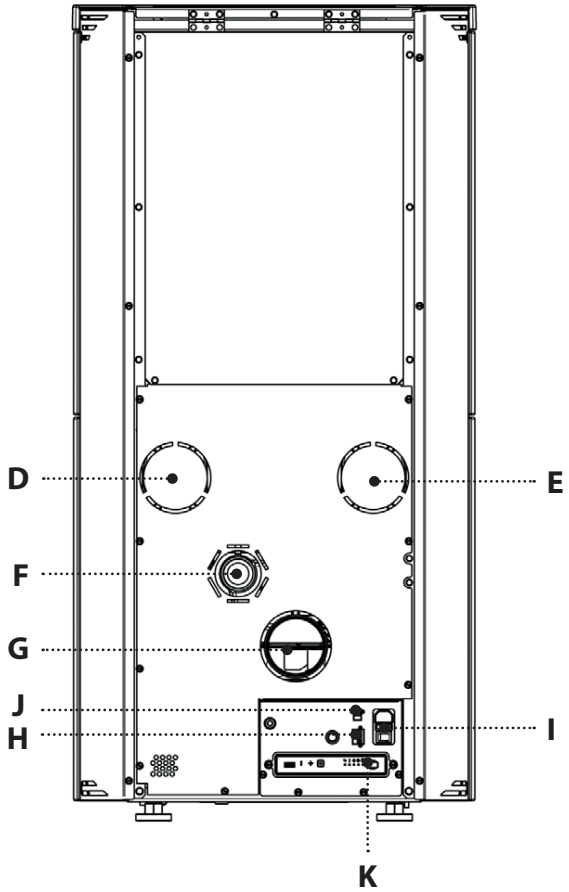

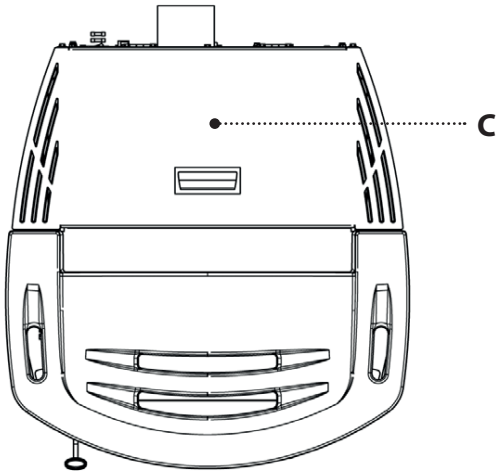

A	Room air output	**E**	Ducting Z1	**I**	On/Off Fuse Power supply 230V
B	Access to combustion chamber and ash drawer	**F**	Combustion air inlet	**J**	TA input
C	Pressure closing pellet hopper	**G**	Fumes exhaust	**K**	Radio/emergency board
D	Ducting Z2	**H**	Ducting thermostat inputs	**-**	-

DUCTING CHARACTERISTICS

The stove is equipped with 2 independent outputs for ducting.
Ducts 1 - 2 are active by default.

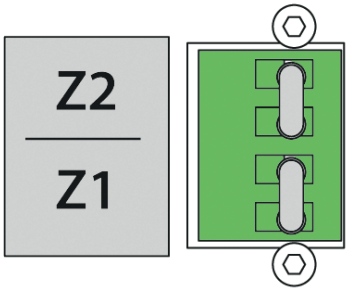

Characteristics:

- ducting output diameter: 2x80 mm
- maximum recommended ducting length 8 m
- thermostatable ducting
- The speed adjustment can be set in 3 modes: OFF, AUTO, COMFORT
- independent activatable/deactivatable ducting (ON-OFF)

OPERATION OF DEFAULT DUCTING

By default ducts 1 and 2 are always in demand (bridges on 1 and 2 present) and follow the operation of the stove.

- No setting required.

OPERATION OF DUCTING WITH THERMOSTAT OR PROBE (OPTIONAL)

The stove is equipped with two independent motors for ducting. The connection of an external thermostat or a temperature probe (NTC 10K) in inputs 1 and 2 placed at the back of the stove, will allow for the duct motor to be controlled regardless of the operation of the stove.
Simply connect the room thermostat/probe and set the desired temperature.
For details on setting the ducting, see chapter:" ***MENU - DUCTING***"

WITH ROOM THERMOSTAT (OPTIONAL)

Remove the bridge on 1 and connect the room thermostat that you wish to thermostat via duct 1.

3 management methods:

DUCTING OPERATION WITH ROOM THERMOSTAT (OPTIONAL)	
SET on OFF (the temperature setting is not visible)	The ducted motor will remain off unless the fumes temperature exceeds the normal operating temperature
SET on AUTO (the temperature setting is not visible)	Once the specific activation threshold has been reached and exceeded, when the temperature has not been reached (CLOSED CONTACT), the duct motor will follow the operation of the stove. Once the temperature set on the thermostat has been reached (OPEN CONTACT), the duct motor will turn OFF and then it will turn back on when required.
SET on COMFORT (the temperature setting is not visible)	Once the specific activation threshold has been reached and exceeded, when the temperature has not been reached (CLOSED CONTACT), the duct motor will follow the operation of the stove but at a lower temperature than in SET AUTO, for greater acoustic-environmental comfort. Once the temperature set on the thermostat has been reached (OPEN CONTACT), the duct motor will turn OFF and then it will turn back on when required.
SIMILAR OPERATING SETTINGS FOR DUCTED MOTOR 2	

WITH PROBE (NTC 10K)

Remove the bridge on 1 and connect the NTC probe in the room that you wish to thermostat via duct 1.

3 management methods:

DUCTING OPERATION WITH NTC PROBE 10KΩ (OPTIONAL)	
SET on OFF Set the desired temperature (from 7 to 37 °C)	The ducted motor will remain off unless the fumes temperature exceeds the normal operating temperature
SET on AUTO Set the desired temperature (from 7 to 37 °C)	Once the specific activation threshold has been reached and exceeded, when the temperature has not been reached, the duct motor will follow the operation of the stove. Once the temperature set in TEMPERATURE has been reached, the duct motor will turn OFF and then it will turn back on when required.
SET on COMFORT Set the desired temperature (from 7 to 37 °C)	Once the specific activation threshold has been reached and exceeded, when the temperature has not been reached, the duct motor will follow the operation of the stove but at a lower temperature than in SET AUTO, for greater acoustic-environmental comfort. Once the temperature set in TEMPERATURE has been reached, the duct motor will turn OFF and then it will turn back on when required.
SIMILAR OPERATING SETTINGS FOR DUCTED MOTOR 2	

TA ADDITIONAL THERMOSTAT (OPTIONAL)

The appliance can check the room temperature by means of an additional thermostat (option).
After turning it on (by pressing 1 or by means of the timer), the stove will operate to reach the value set in the thermostat displaying **WORK** (closed contact). The room probe on the remote control is automatically ignored,

TO INSTALL AND ENABLE IT:

- A mechanical or digital thermostat is required.
- Remove the plug from the power outlet.
- Referring to the figure to the side, connect the two thermostat wires (clean contact - no 230 V) in the relevant terminals located on the back of the machine.
- Connect the stove.
- Press the key (⌄), and set the set temperature on LOW-TA.

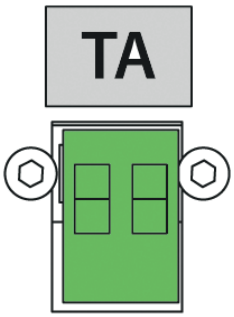

At this point the stove is correctly configured.
It will operate while checking the external additional thermostat according to the TA function.

THE INSTALLATION MUST BE MADE BY QUALIFIED STAFF AND/OR THE MANUFACTURER'S TECHNICAL SERVICE

FUSE

If the stove is not powered, have the condition of the fuse checked by a qualified technician.

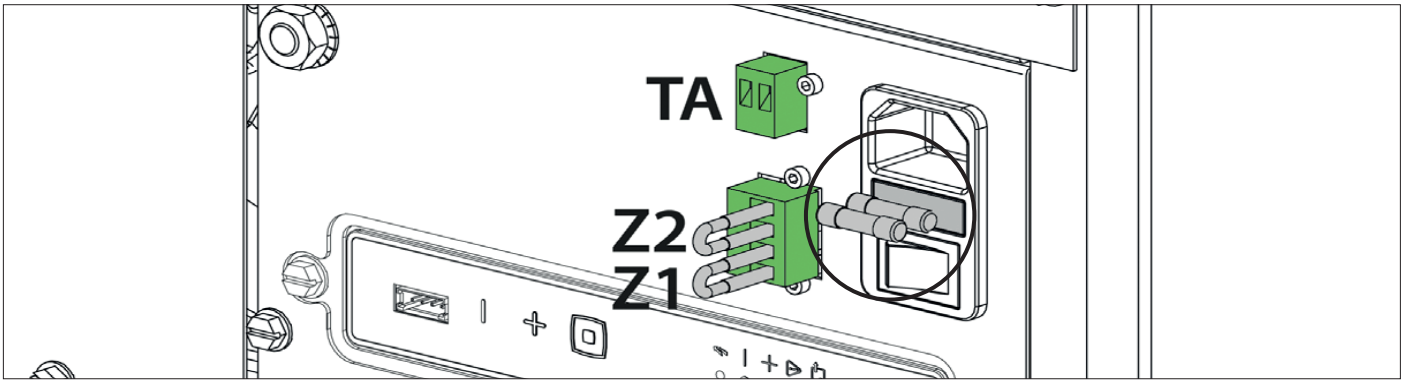

PELLETS AND LOADING

Pellets are made by subjecting wood shavings i.e. the rejects of pure unpainted wood from sawmills, carpentry products and products from other activities connected to wood working and transformation, to very high pressures.
This type of fuel is fully ecological as no glues are used for its compaction. In fact, pellet compactness is guaranteed over time by a natural substance found in wood: lignin.
In addition to being an ecological fuel, making best use of wood residue, pellets also have a series of technical advantages.
While wood has a calorific value of 4.4 kWh/kg (with 15% moisture, therefore after approximately 18 months of curing), that of pellets is 5 kWh/kg.
Pellet density is about 650 kg/m^3 and water content is equal to 8% of its weight. For this reason pellets do not need to be cured to obtain a sufficient heat yield.

The pellets used must be class **A1** certified according to standard **ISO 17225-2** (**ENplus-A1, DIN Plus** or **NF 444** of the following category: "High quality NF biocombustible wood pellets").

UNI EN 303-5 with the following characteristics: water content ≤ 12%, ash content ≤ 0.5% and lower calorific value >17 MJ/kg (in the case of boilers).

The Manufacturer recommends using pellets with a diameter of 6mm with its products.

PELLET STORAGE

To guarantee combustion without problems, the pellets must be kept in a dry place.
Open the tank lid and load the pellets using a scoop.

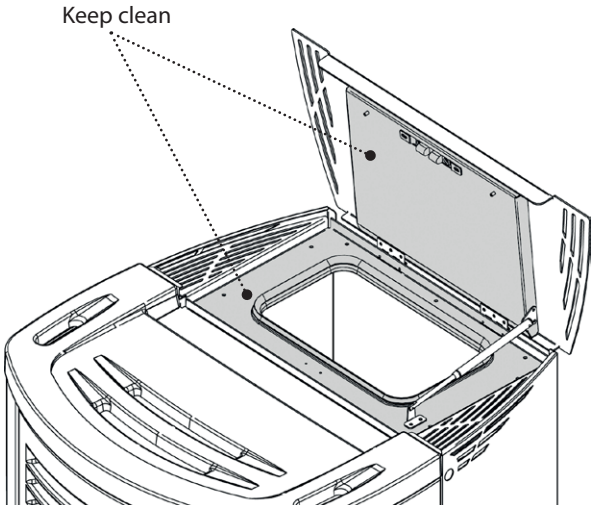

THE USE OF POOR QUALITY PELLETS OR ANY OTHER MATERIAL WILL COMPROMISE STOVE FUNCTIONS, VOIDING THE WARRANTY AND RELEASING THE MANUFACTURER OF LIABILITY.

PELLET HOPPER - PRESSURISED CLOSURE.

Both during the functioning and when the stove is not in use, all the machine doors (pellet hopper, fire door, ash drawer) must always remain closed. The machine doors can only be opened for the time required to load the pellet and for maintenance.

"CLOSE HOPPER - STOVE DOOR"

This indication means that you have 60 seconds to close the hatch/door and the pellet lid.
Once 60 seconds have passed, during ignition the stove will go into "DEPR ALARM" mode, while during normal operation the stove will go into "COOLING STAND-BY" mode before automatically restarting when the conditions are satisfied (cold stove, etc.).

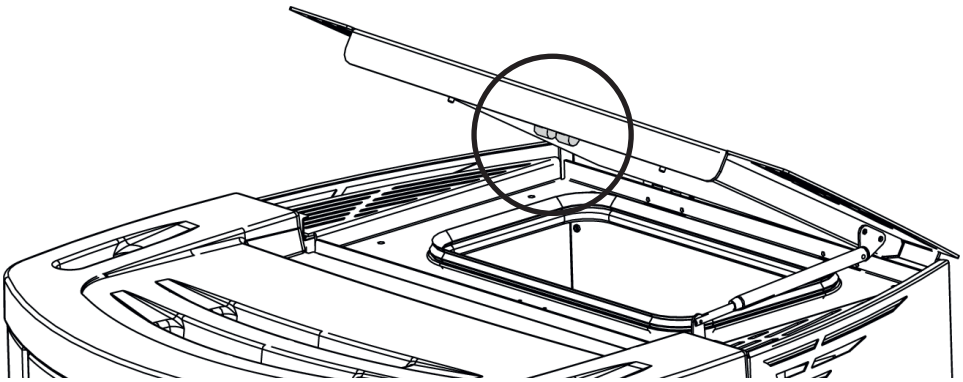

DO NOT PLACE THE BAG DIRECTLY ON THE STOVE TO LOAD THE TANK.
ALWAYS USE A SCOOP TO LOAD THE TANK. DO NOT RUB OR PLACE WEIGHTS ON THE TANK SEAL. KEEP THE TANK COVER SEAL SUPPORTING SURFACE CLEAN AT ALL TIMES. CHECK THE CONDITIONS OF THE SEAL FREQUENTLY. IF DAMAGED, CONTACT YOUR LOCAL AUTHORISED TECHNICIAN.

RADIO/EMERGENCY CARD

The stove is fitted with an emergency radio card located at the side, allowing the basic operation of the stove in the event the LCD handheld remote is damaged or malfunctions.

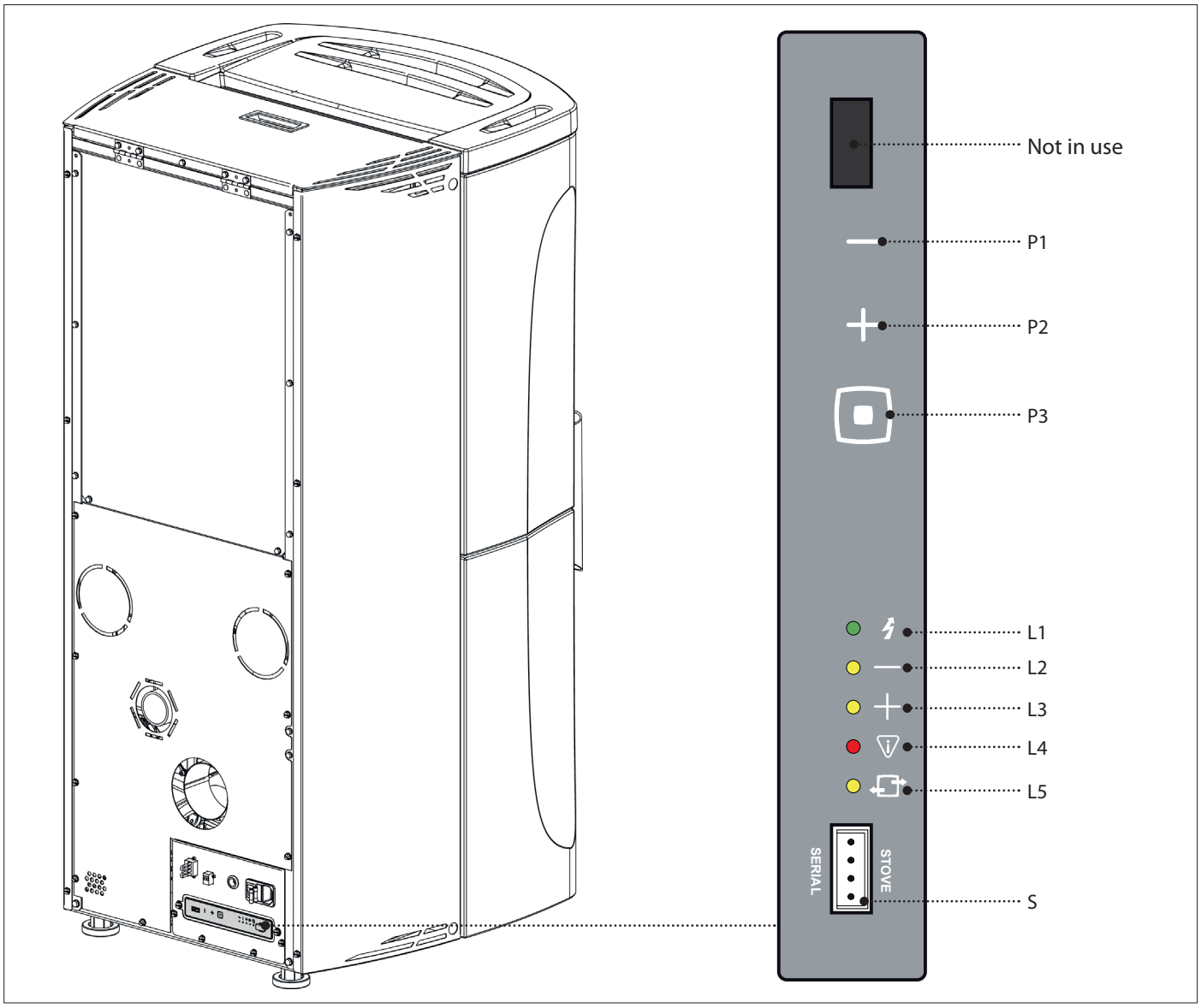

The functions that can be managed from the emergency card are:

L1	Power supply presence	**P1**	Power decrease
L2	LED off: stove off LED on with fixed light: stove in P1-2-3 and working Flashing LED: stove in P1-2-3 and in switch-off/alarm/stby	**P2**	Power increase
L3	LED off: stove off LED on with fixed light: stove in P3-4-5 and working Flashing LED: stove in P3-4-5 and in switch-off/alarm/stby	**P3**	On/off stove.
L4	Led off: normal operation. Led on: alarm present.		
L5	Led off: radio communication not available. Led on: radio communication available.		
S	-		

REMOTE CONTROL

CONFIGURATION

RADIO CONTROL DEVICE CODING PROCEDURE:

1. Disconnect the power supply to the stove.
2. Press the keys ■ and **OK** at the same time until the screen to choose ***RADIO ID*** appears.
3. Using the buttons ∧ and ∨ select the new ***RADIO ID (it is possible to select a RADIO ID between 0 and 63)***.
4. Power the stove. Within 10 seconds (the LED on the emergency module will flash) confirm the selected unit by pressing **OK** on the radio control device.
5. The LED on the emergency module will remain on for 5 seconds to confirm the new configuration.
6. If the configuration was not successful, " " will appear on the display. In this case, repeat the procedure.

THE REMOTE CONTROL IS ALREADY CONFIGURED WITH "RADIO ID". IF THERE IS ANOTHER STOVE, TO AVOID INTERFERENCES, A NEW CONFIGURATION MUST BE PERFORMED, MODIFYING ONE OF THE TWO STOVES.

SOME RADIO FREQUENCY DEVICES (E.G. MOBILE PHONES, ETC...) MAY CAUSE INTERFERENCE WITH COMMUNICATION BETWEEN THE REMOTE CONTROL AND THE STOVE.

REMOTE CONTROL ROOM PROBE CALIBRATION

This mode allows for the room temperature detected by the remote control to be calibrated (only with ventilation active). For a correct calibration, it is advisable to place the remote control in a room with constant temperature and wait at least a couple of hours.
The calibration procedure is the following:

- Access the menu and go to "**TECHNICAL MENU**".
- Set the access key "F4". - "**ADJ REM PROBE**"
- Using keys ∨ or ∧ adjust the desired room calibration.
- Save and exit by pressing ■.

BATTERY TYPE AND REPLACEMENT

To insert/replace the batteries, simply remove the battery protection cover at the back of the remote control (figure 1).
Insert the batteries respecting the symbols on the remote control and on the battery itself.

3 AAA batteries are required for the remote control to function.

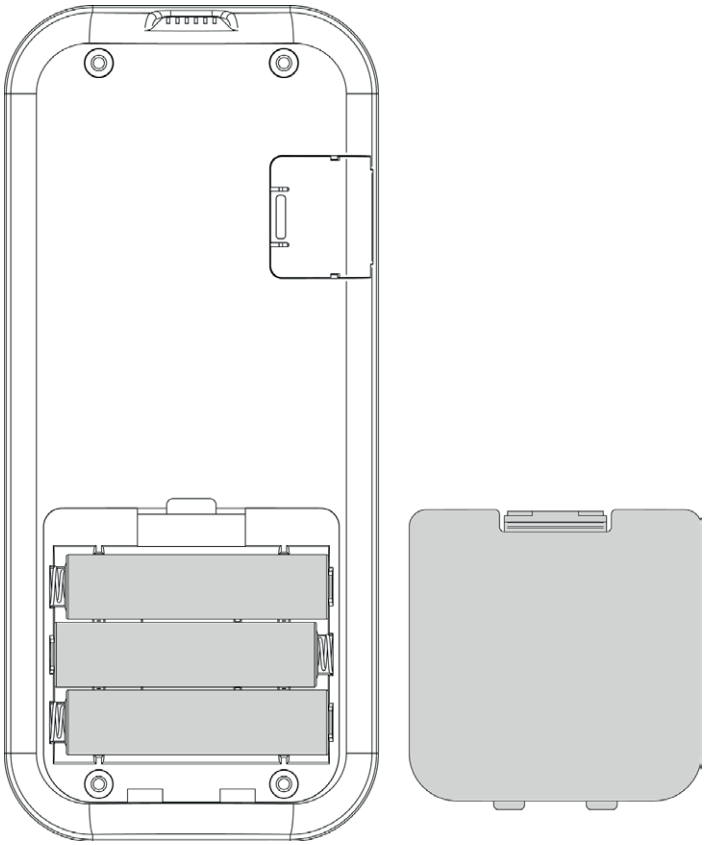

(figure 1)

Respect the environment!
Used batteries contain metals that are harmful to the environment. For this reason they must be disposed of separately in appropriate containers.

REMOTE CONTROL FEATURES

The remote control is fitted with an LCD backlit display. The backlighting lasts 5 seconds. After a certain time, to save battery power, the display turns off (sleep mode).
It turns back on after pressing the ON/OFF key (6).

WARNING!
Do not place the remote control in direct or indirect contact with water. The remote control may not work properly in the presence of humidity or if it is exposed to water.

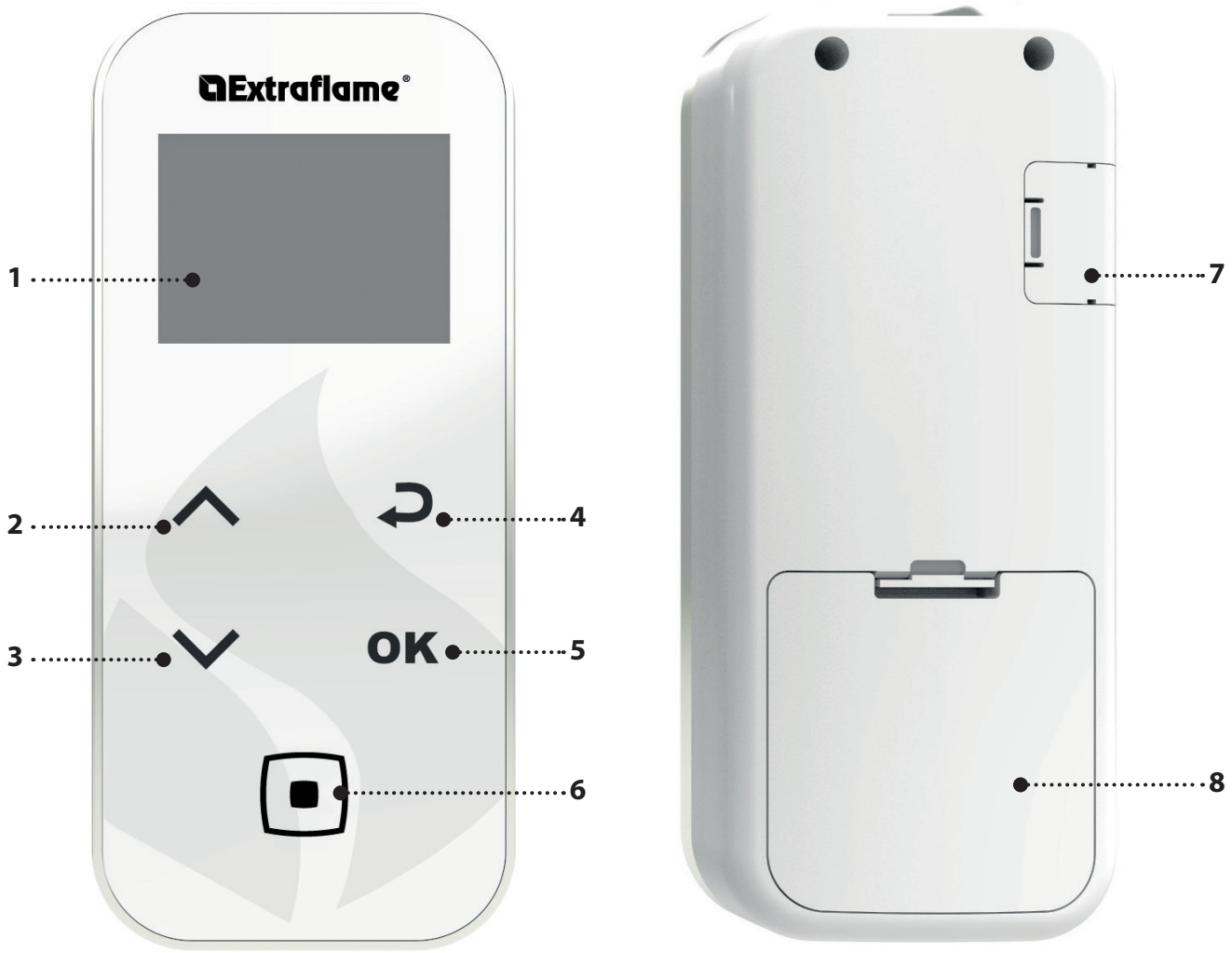

1.	DISPLAY
2.	POWER/ scroll through the menus/increase - select a setting
3.	SET ROOM THERMOSTAT scroll through the menus/reduce - deselect a setting
4.	Return key
5.	Key to access MENU and CONFIRM
6.	On/off stove or restore from sleep mode.
7.	Serial cable input
8.	Battery housing

DISPLAY

SCREEN IN OPERATION

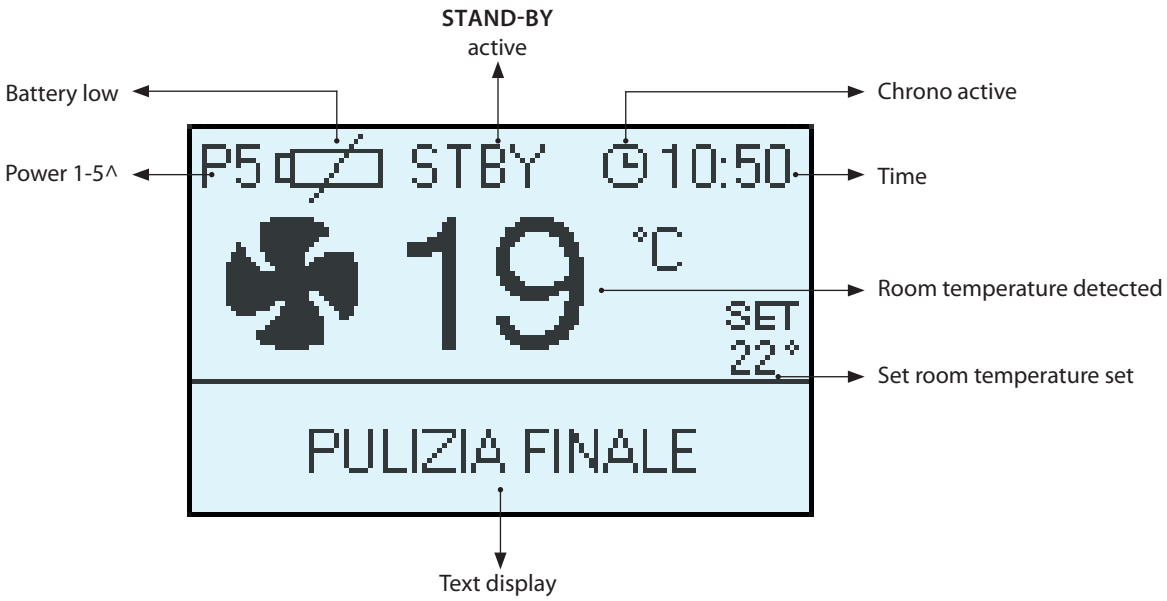

SCREEN WITH EXTERNAL THERMOSTAT CONNECTED TO THE "TA" TERMINAL

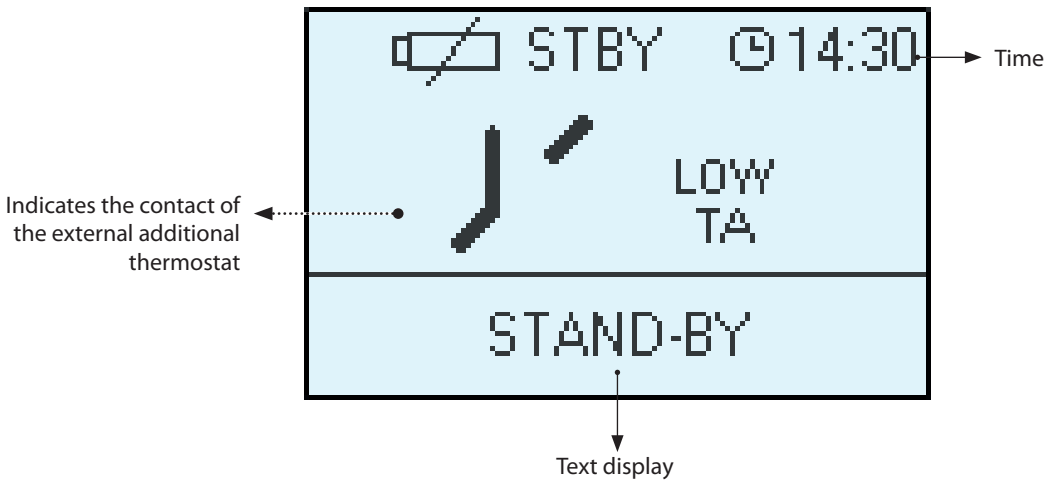

MAIN MENU

FUNCTION	KEY
∧ ∨	Scroll through parameters Edit setting data
■	On - off key

FUNCTION	KEY
↩	Back - exit key
OK	Menu access key

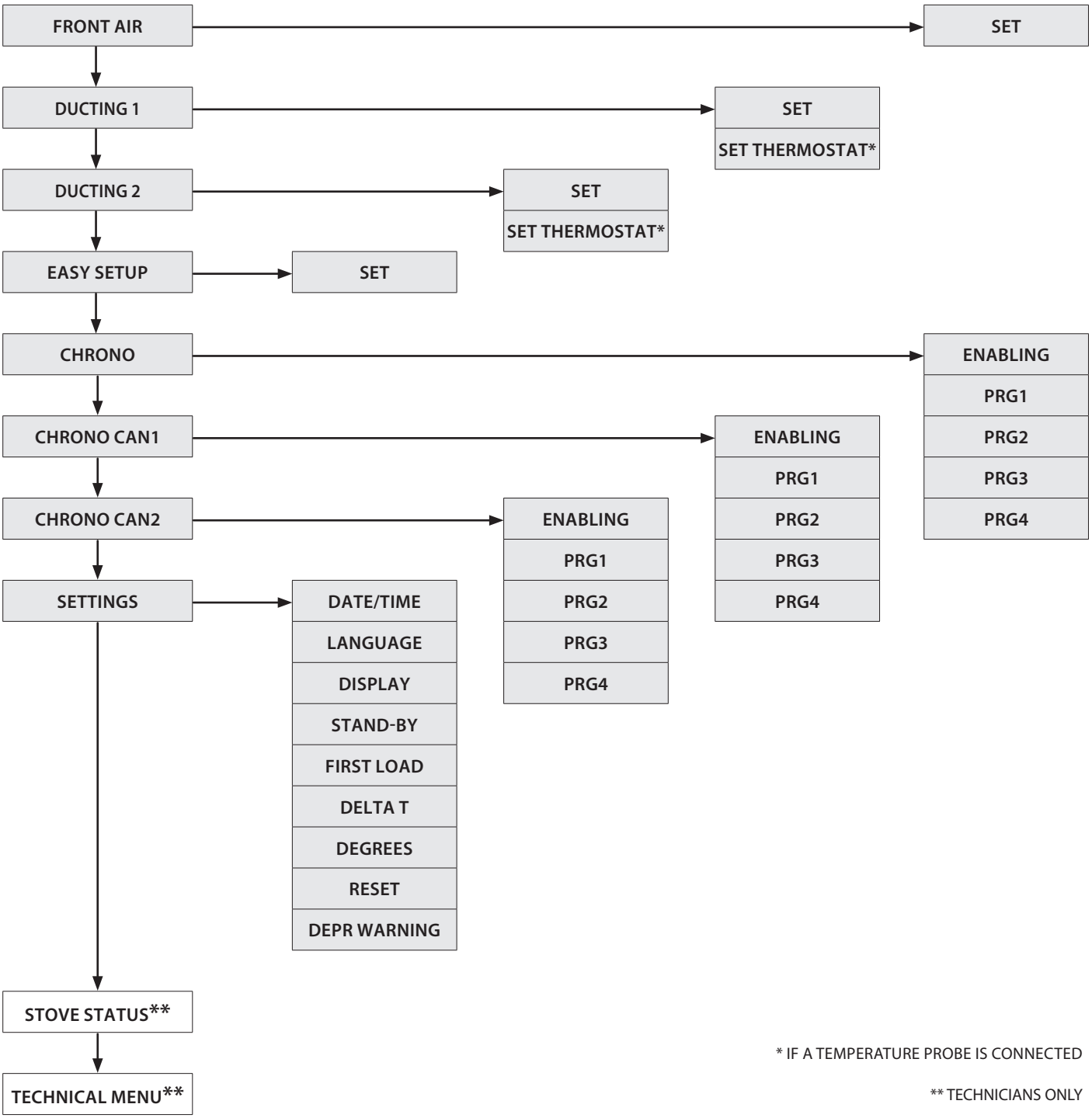

* IF A TEMPERATURE PROBE IS CONNECTED

** TECHNICIANS ONLY

GENERAL WARNINGS

Advice to follow for the first start-ups of the product:
During the first hours of operation, there may be some smoke or odours, but they are due to the normal "thermal break-in" process. During this process, the duration of which changes depending on the product, it is recommended to:

- Ventilate the room well
- If present, remove any majolica or natural stone parts from the top part of the product
- Activate the product at the maximum power and temperature
- Avoid remaining in the room for a long time
- Do not touch the surfaces of the product

Notes:
The process is completed after a few heating/cooling cycles.
Do not use for the combustion of elements or substances other than those indicated in the manual.

Before turning on the product, it is necessary to perform the following checks:

- If it is intended to be connected to a hydraulic system, it must be complete and fully functional and in compliance with the instructions given in the product manual and with the relevant regulations in force.
- The pellet hopper must be completed loaded
- The combustion chamber and the burn pot must be clean
- Make sure that the fire holder, the ash pan and the pellet hopper close hermetically (if present in the hermetic version); they must be closed and there must be no foreign bodies in the sealing elements and gaskets.
- Check that the power cord is properly connected
- The switch (if present) must be set to position "1".

SETTINGS FOR FIRST USE

After connecting the power cord at the back of the generator, turn the switch (if any) to position (I).
The switch is used to power the heat generator board.

DATE/TIME

This menu allows you to adjust the time and date.

To set: OK > *SETTINGS* > *DATE/TIME*.

LANGUAGE

This menu allows you to change the preferred language.
The languages that can be selected are: Italiano, English, Deutsch, Français, Español, Português, Dansk, Eesti, Hrvatski, Slovenscina, Nederlands, Polski - Czech.

To set: OK > *SETTINGS* > *LANGUAGE*.

DEGREES

This menu allows you to set the desired unit of measurement.

To set: OK > *SETTINGS* > *DEGREES*

IT IS FORBIDDEN TO USE THE APPLIANCE WITHOUT THE SEPARATOR (A) AND FLAME GUARD (B).
REMOVING THEM WILL AFFECT THE SAFETY OF THE PRODUCT AND WILL INVALIDATE THE WARRANTY IMMEDIATELY.
IN THE EVENT OF WEAR OR DETERIORATION, REQUEST THE REPLACEMENT OF THE PART FROM THE SERVICE CENTRE (THIS TYPE OF REPLACEMENT IS NOT COVERED BY WARRANTY BECAUSE IT IS A COMPONENT SUBJECT TO WEAR).

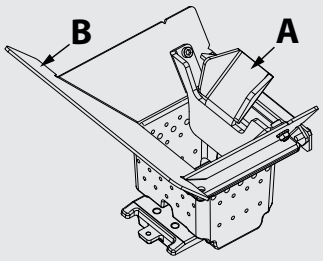

OPERATION AND LOGIC

IGNITION
After checking the previous points, press the key ▪ for three seconds to switch on the stove. For the ignition phase, 15 minutes are available during which the presence of the flame is checked. Once the control temperature has been reached, the stove stops the ignition phase and goes into PREPARATION.

PREPARATION
During the preparation phase, the stove stabilises and gradually increases combustion, and then activates the ventilation and goes into WORK.

WORK
During the work phase, the stove reaches the POWER defined by the user, heating the room until the SET THERMOSTAT has been reached. See following note.

ADJUSTING THE SET THERMOSTAT
The SET ROOM THERMOSTAT can be set using keys 2 and 3, from LOW-TA 7 - 37 °C - HOT. If the value is between 7 - 37°C, the stove checks the room temperature using a probe in the remote control. Once the set temperature has been reached, the stove automatically reduces the power ensuring optimal comfort and reducing the consumption of pellets: this process is called "modulation".

LOW-TA - HOT
If the SET THERMOSTAT is "LOW-TA" (set below the 7°C threshold) the temperature is checked by the additional thermostat contact, thus ignoring the temperature probe in the remote control.
If the contact is open (met), the stove operates at the minimum value.
If the contact is closed (required), the stove operates at the set power.
If the setting is on "HOT" (set above 37°C) the stove always operates at the set power, ignoring the external contact and the temperature probe.

ADJUSTING THE POWER
The power has 5 levels of operation, Pressing the key ^ allows you to view the set power which can be changed using the keys v or ^.
Power 1 = minimum level - Power 5 = maximum level.
The change is confirmed by pressing the key **OK**.

AUTO BLOW
During the work phase and at regular time intervals, the stove cleans the burn pot by means of an operation called "AUTO BLOW".
The activation of this function is shown on the display with the relative message. During the "AUTO BLOW" the pellet loading is slowed down and the fumes motor is increased.
After the cleaning phase, the stove goes back to the normal operating conditions.

SWITCH-OFF
Press the key ▪ for three seconds.
After performing this operation, the appliance automatically enters the switch-off phase, and stops loading pellets.
The fumes motor and the hot air fan motor remain on until the stove temperature falls below the safety threshold.

RE-IGNITION
The stove can be switched back on only if the fume temperature is lower than a preset threshold and if a minimum safety time has elapsed.

NEVER USE FLAMMABLE LIQUIDS FOR IGNITION!
WHILE FILLING, DO NOT BRING THE PELLET BAG IN CONTACT WITH THE BOILING STOVE!
IN CASE OF CONTINUOUS FAILED IGNITIONS, CONTACT AN AUTHORISED TECHNICIAN.

NO IGNITION

THE FIRST IGNITION MAY FAIL, SINCE THE AUGER IS EMPTY AND IT IS NOT ALWAYS POSSIBLE TO FILL THE BURN POT WITH THE RIGHT AMOUNT OF PELLETS TO START THE FLAME REGULARLY.
IF THE PROBLEM OCCURS ONLY AFTER A FEW MONTHS OF OPERATION, MAKE SURE THAT THE ROUTINE CLEANING OPERATIONS INDICATED ON THE STOVE BOOKLET HAVE BEEN CARRIED OUT PROPERLY

FRONT AIR

The menu for two operating modes of the front fan to be set: AUTO - COMFORT.

To set: *OK > FRONT AIR >SET*

DUCTING 1

The menu allows you to set three operating modes of ducting 1, and to adjust the temperature set if an NTC probe is connected to the input: OFF - AUTO - COMFORT

To set: *OK > DUCTING 1 > SET*

To adjust the temperature: *OK > DUCTING 1 > TEMPERATURE*

DUCTING 2

The menu allows you to set three operating modes of ducting 1, and to adjust the temperature set if an NTC probe is connected to the input: OFF - AUTO - COMFORT

To set: *OK > DUCTING 2 > SET*

To adjust the temperature: *OK > DUCTING 2 > TEMPERATURE*

EASY SETUP

The volumetric weight of the pellet is the ratio between the weight and the volume of the pellet. This ratio may change while keeping the quality of the pellet unchanged. Use the **EASY SETUP** function to change the calibration of the volumetric weight by increasing or decreasing the preset values.
In the stove program, the available values from "- 3" to "+ 3"; all stoves are calibrated in production with the optimal value which is 0.

If you notice an excessive deposit on the burn pot, enter the **EASY SETUP** program and lower the value by one unit to "- 1"; then wait the following day and if you do not see an improvement reduce it even more up to a maximum of "- 3". If, on the other hand, it is necessary to increase the calibration of the volumetric weight of the pellet, switch the factory value from "0" to "+ 1, + 2, + 3" as required.

To set: *OK* > **EASY SETUP**

EXCESSIVE PELLET DEPOSIT IN THE BURN POT			NORMAL OPERATION	MINIMUM PELLET DEPOSIT IN THE BURN POT		
-3	**-2**	**-1**	**0**	**+1**	**+2**	**+3**
THIRD DECREASE RANGE IF THE FIRST TWO ARE NOT ENOUGH	SECOND DECREASE RANGE IF THE FIRST IS NOT ENOUGH	FIRST DECREASE RANGE (TEST FOR 1 DAY)	OPTIMAL FACTORY VALUE	FIRST INCREASE RANGE	SECOND INCREASE RANGE IF THE FIRST IS NOT ENOUGH	THIRD INCREASE RANGE IF THE FIRST TWO ARE NOT ENOUGH

N.B.: If this calibration does not solve the pellet deposit in the burn pot, please contact your local service centre.

CHRONO

This function allows you to program the stove to switch on and off automatically.
The factory setting for **CHRONO** is off.
The chrono allows you to program 4 time slots within a day to be used for every day of the week. **In each time slot, it is possible to set the ignition and switch-off times, the days of use of the programmed time slot, the desired temperature and the set power. The current date and time setting is essential for the correct operation of the timer.**

Recommendations
Before using the chrono function, you must set the current date and time, so check that you have followed the points listed in the sub-chapter "DATE/TIME**". To make sure that the chrono function works properly, as well as programming it, it is also necessary to activate it. The 4 time slots can be overlapped by setting the ignition and switch-off times. In this way, a combination of times is obtained in which it is possible to set different temperatures and powers without affecting the operating status of the stove.**
N.B.: if there are overlapped time slots, the product will remain on until the furthest switch-off time.

ENABLING

It allows to enable/disable the timer and the different time slots of the stove.

To set: *OK > CHRONO > ENABLING.*

PRG 1-4

Prg x allows you to set the ignition and switch-off time, the days of use of the programmed time slot and the temperature (LOW-TA - 07 - 37 °C - HOT) and also the desired power. The current date and time setting is essential for the correct operation of the timer.

To set: *OK > CHRONO > PRGX*

CHRONO	>	ENABLING	>	ENABLE PRG 1	On/off	Enable/disable PRG 1
		∨		ENABLE PRG 2	On/off	Enable/disable PRG 2
		∨		ENABLE PRG 3	On/off	Enable/disable PRG 3
		∨		ENABLE PRG 4	On/off	Enable/disable PRG 4
		∨				
		PRG1	>	START PRG1	OFF-00:00-23:50	Ignition time PRG1
		∨		STOP PRG1	OFF-00:00-23:50	Switch-off time PRG1
		∨		MONDAY...SUNDAY	On/off	Enable/disable the days of PRG1
		∨		SET PRG1	LOW-TA - 07- 37 °C - HOT	Set thermostat PRG1
		∨		POWER PRG1	1-5	Set power PRG1
		∨				
		PRG2	>	START PRG2	OFF-00:00-23:50	Ignition time PRG2
		∨		STOP PRG2	OFF-00:00-23:50	Switch-off time PRG2
		∨		MONDAY...SUNDAY	On/off	Enable/disable the days of PRG2
		∨		SET PRG2	LOW-TA - 07- 37 °C - HOT	Set thermostat PRG2
		∨		POWER PRG2	1-5	Set power PRG2
		∨				
		PRG3	>	START PRG3	OFF-00:00-23:50	Ignition time PRG3
		∨		STOP PRG3	OFF-00:00-23:50	Switch-off time PRG3
		∨		MONDAY...SUNDAY	On/off	Enable/disable the days of PRG3
		∨		SET PRG3	LOW-TA - 07- 37 °C - HOT	Set thermostat PRG3
		∨		POWER PRG3	1-5	Set power PRG3
		∨				
		PRG4	>	START PRG4	OFF-00:00-23:50	Ignition time PRG4
				STOP PRG4	OFF-00:00-23:50	Switch-off time PRG4
				MONDAY...SUNDAY	On/off	Enable/disable the days of PRG4
				SET PRG4	LOW-TA - 07- 37 °C - HOT	Set thermostat PRG4
				POWER PRG4	1-5	Set power PRG4

WHEN THE WEEKLY PROGRAMMER IS ACTIVE, THE RELATIVE ICON WILL BE SHOWN ON THE REMOTE CONTROL DISPLAY.

EXAMPLE OF TIMER WITH OVERLAPPING TIME SLOTS

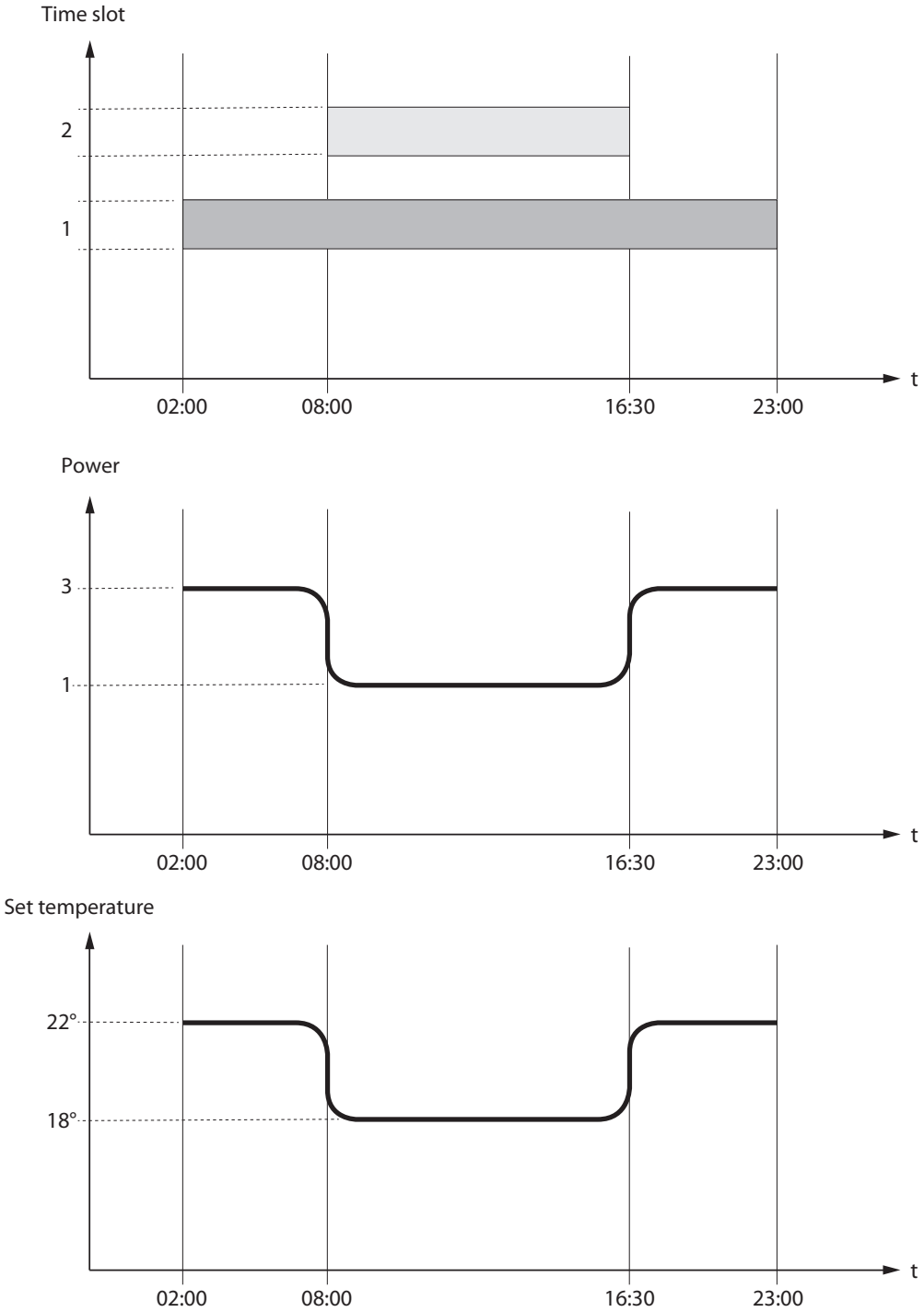

	Time slot 1	start 02:00 stop 23:00	power 3 - set temp 22°C
	Time slot 2	start 08:00 stop 16:30	power 1 - set temp 18°C
	stove operation		

CHRONO CAN1

This function allows you to program the ducting to switch on and off automatically.
The factory setting for **CHRONO CAN1** is off.

The chrono allows you to program 4 time slots within a day to be used for every day of the week.
In each time slot, it is possible to set the ignition and switch-off times, the days of use of the programmed time slot. The current date and time setting is essential for the correct operation of the timer.

Recommendations
Before using the chrono function, you must set the current date and time, so check that you have followed the points listed in the sub-chapter "DATE/TIME**". To make sure that the chrono function works properly, as well as programming it, it is also necessary to activate it. The 4 time slots can be overlapped by setting the ignition and switch-off times. In this way, a combination of times is obtained in which it is possible to set different temperatures and powers without affecting the operating status of the stove.**
N.B.: if there are overlapped time slots, the product will remain on until the furthest switch-off time.

ENABLING

It allows to enable/disable the timer and the different time slots of the stove.
To set: *OK > CHRONO CAN X> ENABLING.*

PRG 1-4

Prg x allows you to set the ignition and switch-off time, the days of use of the programmed time slot.
The current date and time setting is essential for the correct operation of the timer.
To set: *OK > CHRONO CAN X > PRGX*

CHRONO	>	ENABLING	>	ENABLE PRG 1	On/off	Enable/disable PRG 1
		∨		ENABLE PRG 2	On/off	Enable/disable PRG 2
		∨		ENABLE PRG 3	On/off	Enable/disable PRG 3
		∨		ENABLE PRG 4	On/off	Enable/disable PRG 4
		∨				
		PRG1	>	START PRG1	OFF-00:00-23:50	Ignition time PRG1
		∨		STOP PRG1	OFF-00:00-23:50	Switch-off time PRG1
		∨		MONDAY...SUNDAY	On/off	Enable/disable the days of PRG1
		∨				
		PRG2	>	START PRG2	OFF-00:00-23:50	Ignition time PRG2
		∨		STOP PRG2	OFF-00:00-23:50	Switch-off time PRG2
		∨		MONDAY...SUNDAY	On/off	Enable/disable the days of PRG2
		∨				
		PRG3	>	START PRG3	OFF-00:00-23:50	Ignition time PRG3
		∨		STOP PRG3	OFF-00:00-23:50	Switch-off time PRG3
		∨		MONDAY...SUNDAY	On/off	Enable/disable the days of PRG3
		∨				
		PRG4	>	START PRG4	OFF-00:00-23:50	Ignition time PRG4
				STOP PRG4	OFF-00:00-23:50	Switch-off time PRG4
				MONDAY...SUNDAY	On/off	Enable/disable the days of PRG4

CHRONO CAN2

This function allows you to program the ducting to switch on and off automatically.
The factory setting for **CHRONO CAN2** is off.

> For details, see chapter **CHRONO CAN1**

SETTINGS

◆ DATE/TIME ◆ LANGUAGE ◆ DEGREES	SEE CHAPTER: SETTINGS FOR FIRST USE.

DISPLAY

The "**DISPLAY**" menu allows:

- Adjustment of Display contrast.
- Activation/Deactivation of backlight.
- Enabling/disabling of acoustic signal.
- STAND-BY — Setting of the timer to turn off the Display backlight.
- RESET — Setting of the timer to turn off the Display (sleep mode).

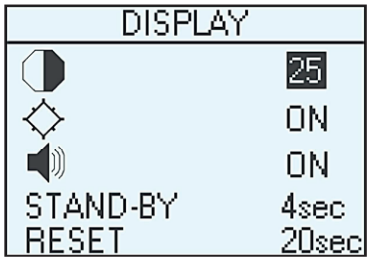

To set: *OK > SETTINGS > DISPLAY*.

SETTING THE SHORT TIME PROMOTES BATTERY LIFE

STAND-BY

The STAND-BY function is used to switch off the stove immediately instead of modulating the power.

To set: *OK > SETTINGS > STAND-BY*.

STAND-BY FUNCTION ON

If the STAND-BY function is active (ON), if the room temperature exceeds the value of the SET THERMOSTAT + DELTA T OFF, then the stove will switch off after a preset delay, displaying STAND-BY.
When the room temperature is lower than the SET THERMOSTAT - DELTA T ON and after a possible cooling time, the stove switches back on.

STAND-BY FUNCTION OFF (FACTORY SETTING)

If the STAND-BY function is not active (OFF), if the stove exceeds the set room temperature it will switch to the minimum value, modulating and displaying "modulation". When the room temperature is lower than the SET THERMOSTAT the stove goes back to operating at the set power, displaying "work".

OPERATION WITH ADDITIONAL THERMOSTAT (OPTIONAL)

STAND-BY FUNCTION OFF (FACTORY SETTING)

If the STAND-BY function is not active (OFF), if the stove exceeds the room temperature set on the additional thermostat (contact open) it will switch to the minimum value, displaying MODULATION. When the room temperature is lower than the value set on the additional thermostat (contact closed), the stove goes back to operating at the set power, displaying WORK.

STAND-BY FUNCTION ON

When the STAND-BY function is active (ON), when the room temperature set on the additional thermostat has been reached (contact open), the stove will switch off after a preset delay, displaying STAND - BY.
When the room temperature is lower than the value set on the additional thermostat (contact closed) and after a possible cooling time, the stove switches back on.

FOR CORRECT OPERATION, SET THE SET THERMOSTAT TO LOW-TA.
> SEE CHAPTER ON THE INSTALLATION OF THE ADDITIONAL THERMOSTAT

FIRST LOAD

This function allows you to activate the pellet loading gear motor for continuous operation.
Before activating the function, make sure that the stove is cold and "OFF".

To set: *OK > SETTINGS > FIRST LOAD*

To stop the continuous loading, simply press the OK key for 3 seconds.

DELTA T

This function allows you to set the hysteresis thresholds for ignition (DELTA T ON) and switch-off (DELTA T OFF), used to generate the adjustment interval if it is not managed by an external thermostat.
The possible values for DELTA T vary from 0.5 - 5 °C.

To set: *OK > SETTINGS > DELTA-T*

RESET

It allows you to bring all the values that can be changed by the user back to the factory settings.

To set: *OK > SETTINGS > RESET*.

DEPR WARNING

It allows you to activate the buzzer for acoustic warnings if the door or the hopper are open.

Please note: Activation can reduce battery life by 30%.
Battery life depends on use

To set: *OK > SETTINGS > DEPR WARNING*.

TO FIND OUT WHERE YOUR NEAREST SERVICE CENTRE IS, CONTACT YOUR DEALER OR VISIT THE WEBSITE:
WWW.LANORDICA-EXTRAFLAME.COM

CLEANING AND MAINTENANCE

ALWAYS FOLLOW THE INSTRUCTIONS IN COMPLETE SAFETY!

- Make sure that the power cord is unplugged because the generator may have been programmed to switch on.
- That the generator is cold all over.
- That the ashes are completely cold.
- Ensure efficient air exchange in the room during the product cleaning operations.
- Poor cleaning will compromise correct operation and safety!

MAINTENANCE

For correct operation, the generator must undergo routine maintenance by a qualified technician, at least once a year.
The periodic inspection and maintenance operations must always be performed by specialised, qualified technicians, who operate in accordance with the laws in force and the instructions given in this use and maintenance manual.

FUMES FROM BLOCKED FLUES ARE DANGEROUS!!
KEEP THE CHIMNEY AND FLUE CLEAR AND CLEAN IN ACCORDANCE WITH THE INSTRUCTIONS.
EVERY YEAR, HAVE THE FUME EXTRACTION SYSTEM, FLUE PIPES AND T-FITTINGS, INCLUDING THE INSPECTION CAPS, CLEANED. IF PRESENT, ALSO CLEAN THE ELBOWS AND HORIZONTAL SECTIONS!
THE GENERATOR CLEANING FREQUENCY IS INDICATIVE! IT DEPENDS ON THE QUALITY OF THE PELLETS AND FREQUENCY OF USE.
THESE OPERATIONS MAY SOMETIMES NEED TO BE PERFORMED MORE OFTEN

PERIODIC CLEANING UNDER USER'S RESPONSIBILITY

The periodic cleaning operations, as indicated in this use and maintenance manual, must be performed with the utmost care after reading the instructions, procedures and frequency described in this use and maintenance manual.

CLEANING THE SURFACES AND COVERING
Never use abrasive or chemically aggressive detergents for cleaning!
The surfaces must be cleaned when the generator and coating are completely cold. For the maintenance of the surfaces and metal parts, simply use a cloth dampened with water or water and neutral soap.
Failure to comply with these instructions may damage the surfaces of the generator and cause the invalidation of the warranty.

CLEANING THE CERAMIC GLASS
Never use abrasive or chemically aggressive detergents for cleaning!
The ceramic glass must be cleaned when the glass is completely cold.
To clean the ceramic glass, simply use a dry brush and some damp newspaper dipped in ash. If the glass is very dirty, use a specific cleaning agent for ceramic glass. Spray a small amount on a cloth and use it on the ceramic glass. Do not spray the cleaning agent or any other liquid directly on the glass or seals!

Failure to comply with these instructions may damage the surfaces of the generator and cause the invalidation of the warranty

CLEANING THE PELLET HOPPER
When the hopper is completely empty, disconnect the generator power cord, remove any residue (dust, debris, etc.) from the empty hopper before filling it up.

THE PELLET HOPPER GASKETS, BURN POT AND FIRE DOOR GUARANTEE CORRECT STOVE OPERATION. THEY MUST BE PERIODICALLY CHECKED BY THE USER. IF THEY ARE WORN OR DAMAGED, DO NOT USE THE STOVE UNTIL THEY HAVE BEEN REPLACED.
THESE OPERATIONS MUST BE PERFORMED BY A QUALIFIED TECHNICIAN.

IF THE POWER CORD IS DAMAGED, IT MUST BE REPLACED BY THE SERVICE CENTRE OR BY A SIMILARLY QUALIFIED PERSON, SO AS TO AVOID ALL RISKS.

BURN POT AND COMBUSTION CHAMBER:

By means of a mechanical system, the burn pot is cleaned at automatically pre-set intervals. **It is however advisable to remove any residues using a vacuum cleaner.**

- Suck the ash deposited between the partition and the fire door.
- Remove the resistor assembly.
- Clean the combustion chamber and the bottom of the burn pot completely, using a suitable vacuum cleaner.

After cleaning the burn pot, always make sure:

- **That the pellet slide has been positioned correctly towards the pellet output (A).**
- **That the pellet slide assembly rests on the burn pot correctly, and not on another surface of the combustion chamber.**
- **That the slide assembly has been pushed towards the wall.**

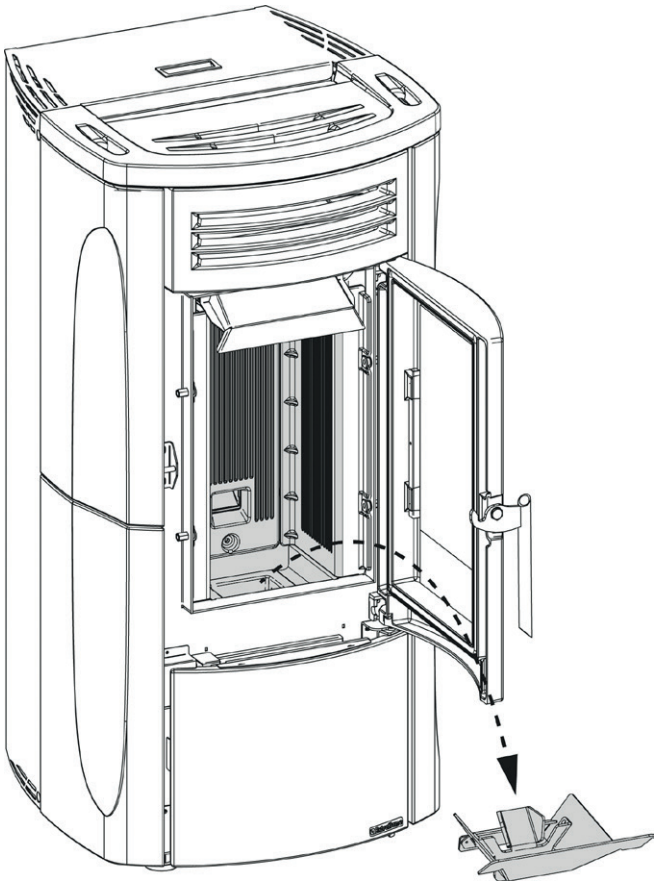

DETAILS ON BURN POT CLEANING

To clean the burn pot it is necessary to remove the assembly.
After repositioning it, make sure:

- **that the pellet slide assembly rests on the burn pot correctly, and not on another surface of the combustion chamber.**
- **that the slide assembly has been pushed towards the wall (A).**

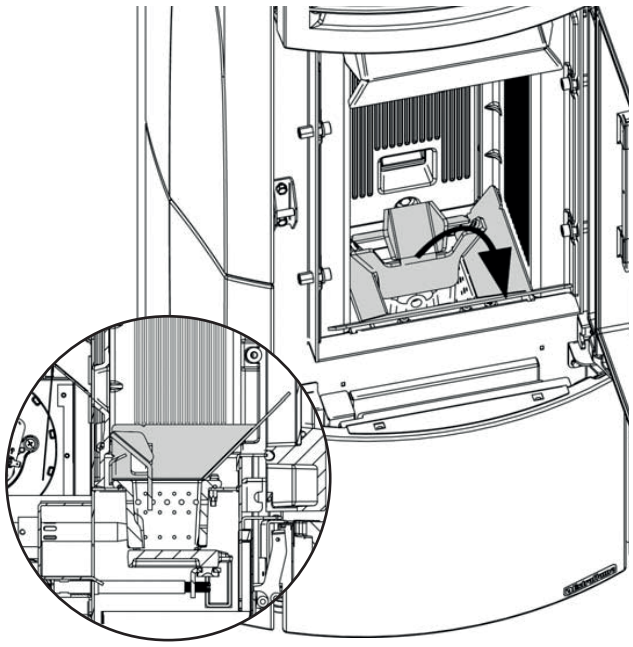

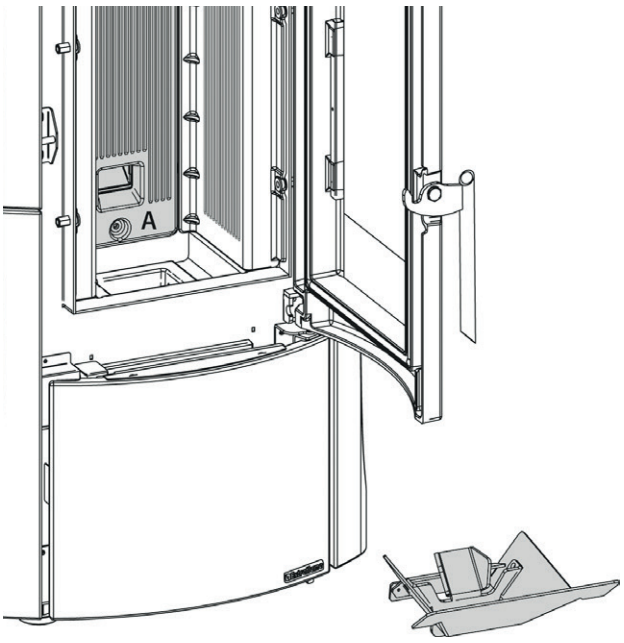

THE IMAGES ARE FOR ILLUSTRATIVE PURPOSES ONLY.

A CLEAN BURN POT GUARANTEES CORRECT OPERATION!
BY MAKING SURE THE BURN POT AND ITS HOLES ARE ALWAYS CLEAN FROM ANY COMBUSTION RESIDUE, EXCELLENT COMBUSTION BY THE GENERATOR IS GUARANTEED OVER TIME, PREVENTING ANY MALFUNCTIONS THAT MAY REQUIRE THE INTERVENTION OF A TECHNICIAN.
THE "EASY SETUP" FUNCTION CAN BE USED TO ADAPT COMBUSTION ON THE BASIS OF THE NEEDS DESCRIBED.

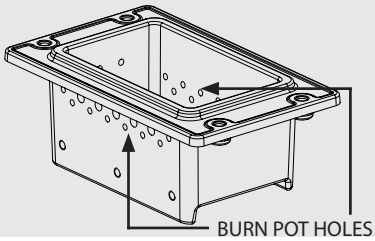

ASH DRAWER:

- Remove the ash drawer and empty it into a suitable container.

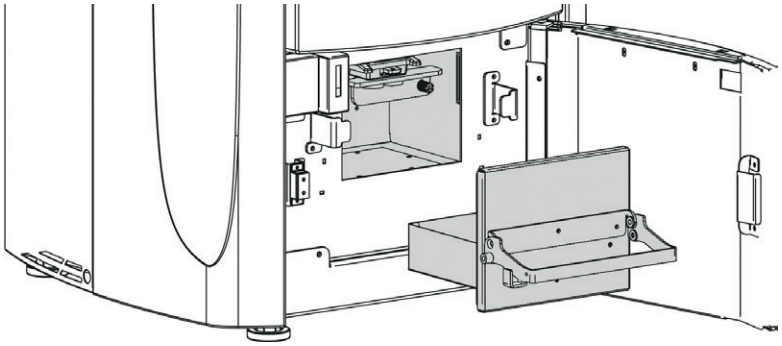

PARTS/FREQUENCY	EVERY 3 DAYS	EVERY 7 DAYS	EVERY YEAR
BURN POT (USER)		X	
COMBUSTION CHAMBER (USER)		X	
TUBE BUNDLE (USER)			X
ASH DRAWER (USER)	X		
CLEANING THE HEAT EXCHANGER (TECHNICIAN)			X
T-SHAPED FITTING/ SMOKE DUCT (TECHNICIAN)			X

One day means an average use of 8h at the rated power.
How often the ash drawer is emptied depends on a number of factors: the type of pellets, the stove output, the use of the stove and the type of installation.

ROUTINE MAINTENANCE PERFORMED BY QUALIFIED TECHNICIANS

Routine maintenance must be performed at least once a year.
Since the generator uses pellets as solid fuel, it requires annual routine maintenance, which must be performed by a **Qualified technician, using only original spare parts.**
Failure to comply may jeopardise the safety of the appliance and invalidate the warranty conditions.
By observing the cleaning schedule reserved to the user described in the use and maintenance manual, the generator will be guaranteed correct combustion over time, thus preventing any faults and/or malfunctions which may require subsequent technical assistance. Requests for routine maintenance are not covered by the warranty.

GASKETS, PELLET HOPPER LID, DOOR, ASH DRAWER AND BURN POT, INSPECTION OF SMOKE DUCTS

The gaskets ensure the proper sealing of the stove and therefore its proper operation.
They must be periodically checked by the user. If they are worn or damaged, do not use the stove until they have been replaced.
These operations must be carried out by a qualified technician.

CONNECTION TO THE FLUE

Annually, or in any case each time the flue pipe needs to be vacuumed and cleaned. If there are horizontal sections, the residue must be removed to prevent it from obstructing the flow of fumes.

SHUT-DOWN (END OF SEASON)

At the end of each season, before turning the stove off, it is advisable to completely empty the pellet hopper, removing any pellet residue and dust with a vacuum cleaner.
Routine maintenance must be performed at least once a year.

THE IMAGES ARE FOR ILLUSTRATIVE PURPOSES ONLY.

CLEANING THE HEAT EXCHANGER

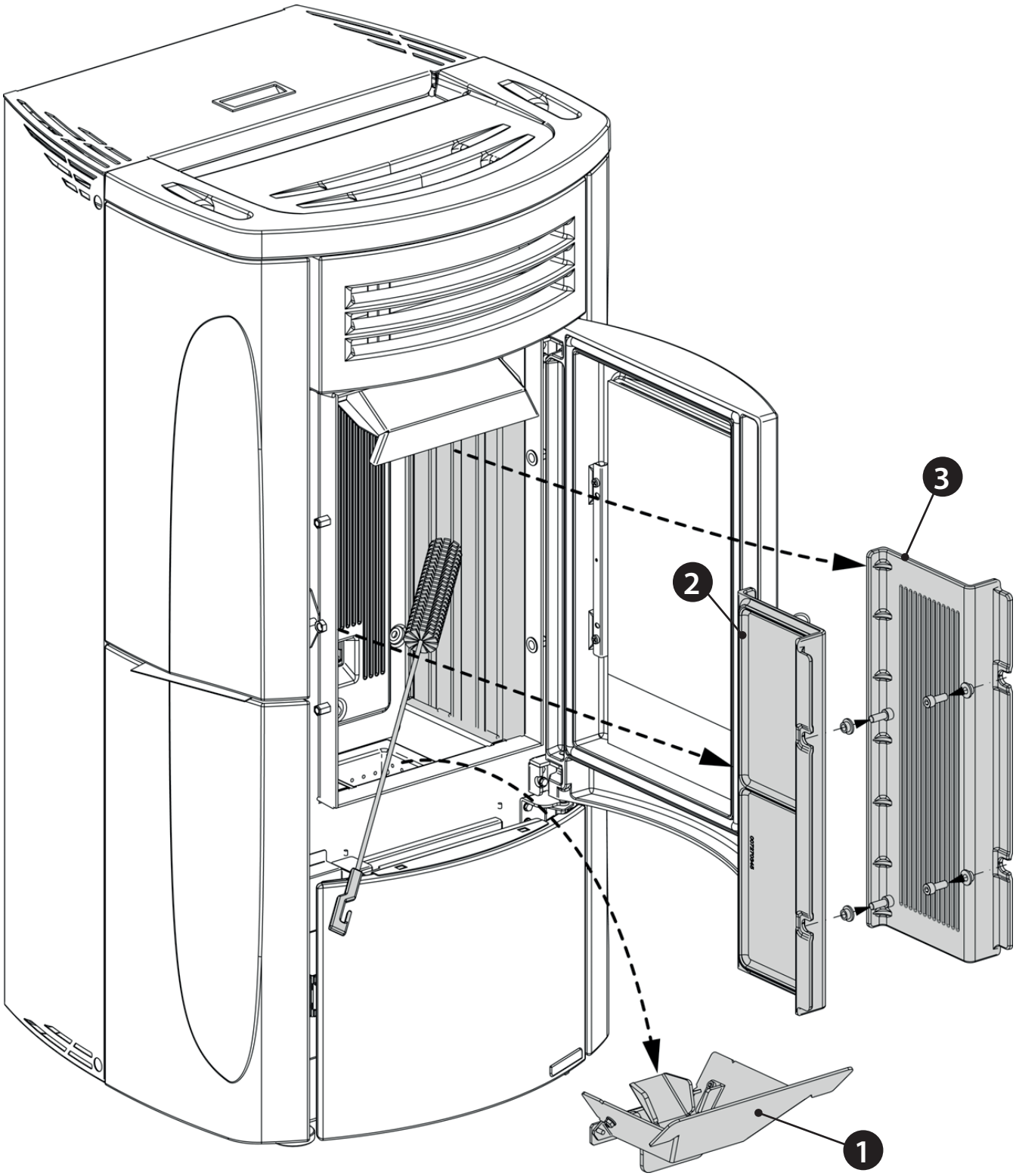

TO FIND OUT WHERE YOUR NEAREST SERVICE CENTRE IS, CONTACT YOUR DEALER OR GO TO THE WEBSITE: WWW.LANORDICA-EXTRAFLAME.COM

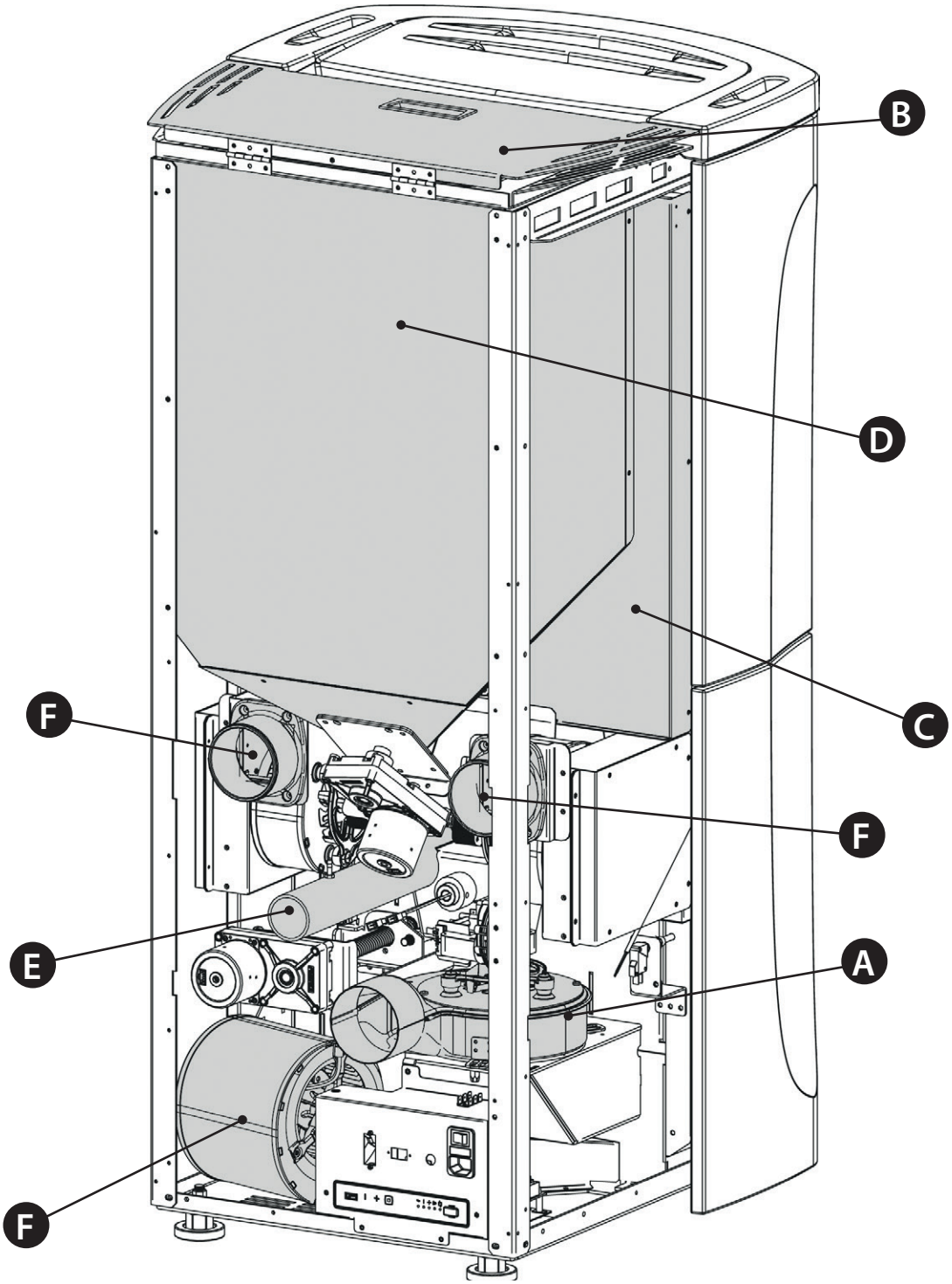

THE IMAGES ARE FOR ILLUSTRATIVE PURPOSES ONLY.

A	Fumes motor (disassembly and cleaning and fumes pipe and "T"), new silicone in the provided points
B	Seals, pallet hopper, inspections, ash drawer and door (replace and apply silicone where required)
C	Combustion chamber & exchanger (total cleaning) including cleaning the glow plug duct
D	Hopper (empty out completely and clean) and check seal.
E	Check air intake pipe and check/clean mechanical pressure switch
F	Room air fan disassembly and removal of dust and pellet debris.

TO FIND OUT WHERE YOUR NEAREST SERVICE CENTRE IS, CONTACT YOUR DEALER OR GO TO THE WEBSITE: WWW.LANORDICA-EXTRAFLAME.COM

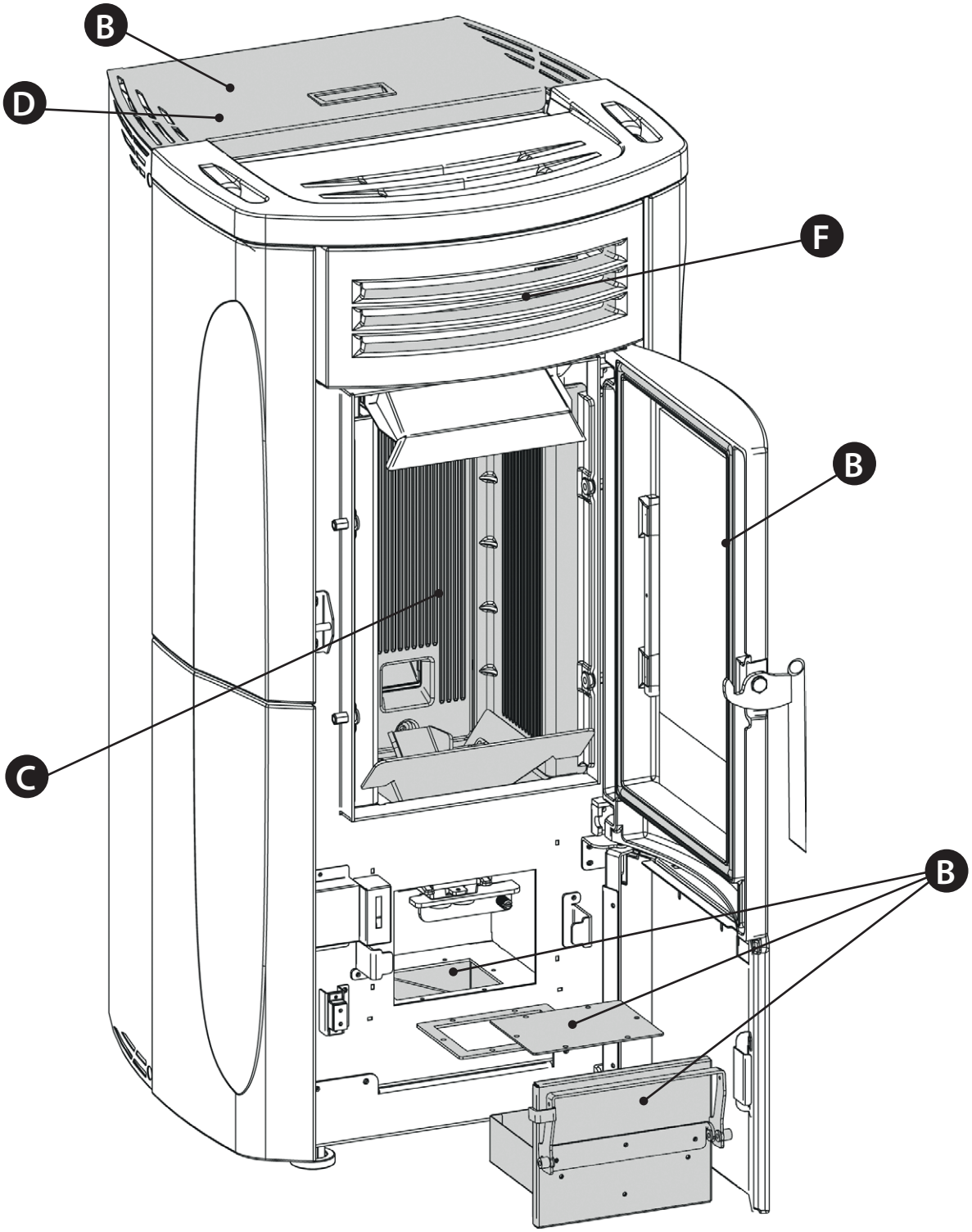

THE IMAGES ARE FOR ILLUSTRATIVE PURPOSES ONLY.

A	Fumes motor (disassembly and cleaning and fumes pipe and "T"), new silicone in the provided points
B	Seals, pallet hopper, inspections, ash drawer and door (replace and apply silicone where required)
C	Combustion chamber & exchanger (total cleaning) including cleaning the glow plug duct
D	Hopper (empty out completely and clean) and check seal.
E	Check air intake pipe and check/clean mechanical pressure switch
F	Room air fan disassembly and removal of dust and pellet debris.

DISPLAYS	
DISPLAY	**REASON**
OFF	Generator off
START	The START phase is in progress
PELLET LOADING	Continuous pellet loading is in progress during the ignition phase
IGNITION	The phase dedicated to the ignition of the flame is in progress
PREPARATION	The flame stabilisation phase is in progress
WORK	The generator has reached the operating speed and works according to user settings
MODULATION	The generator is operating at the minimum speed
BURN POT CLEAN-ING	The mechanical cleaning of the burn pot is in progress
FINAL CLEANING	The cleaning required to cool down the machine before switch-off is in progress
STAND-BY	Generator off but waiting to turn back on autonomously if required by the operating requirements
COOLING STAND BY	The generator is required to turn on during the switch-off phase. If activated, the generator will turn back on automatically as soon as the safety conditions of the machine allow it
BLACK OUT STAND BY	The generator is cooling down after a power failure. After the cooling phase, it will turn back on automatically
AUTO BLOW	The automatic blow function is in progress, to keep the burn pot clean and optimise combustion

ALARMS		
DISPLAY	**EXPLANATION**	**SOLUTION**
FUMES MOTOR FAULT	Fumes motor failure	Contact the service centre
FUMES PROBE	Fumes probe fault	Contact the service centre
HOT FUMES	High exhaust temperature	Check pellet loading (see "Pellet loading adjustment"). If the problem is not solved, contact a qualified technician
NO IGNITION	The pellet hopper is empty Unsuitable pellet loading calibration	Check for the presence of pellets in the hopper. Adjust the pellet flow (see "Pellet loading adjustment"). Check the procedures described in the "Ignition" chapter.
NO IGNITION BLACK OUT	No power during the ignition phase	Turn the stove off by pressing key 6 and repeat the procedures described in the "Ignition" chapter.
NO FLAME	The pellet hopper is empty Pellets not loading The auger motor is not loading pellets	Check for the presence of pellets in the hopper. Adjust the pellet flow (see "Pellet loading adjustment").
DEPR ALARM	The door is not closed properly The ash drawer is not closed properly The combustion chamber is dirty The fumes exhaust pipe is blocked/dirty	Check that the door closes hermetically. Check that the ash drawer closes hermetically. Make sure that the fumes pipe and the combustion chamber are clean.
TRAPDOOR BLOCKED	The automatic cleaning of the burn pot is blocked. Burn pot dirty or clogged The door is not closed properly.	Make sure that the door is closed properly. Make sure that the burn pot is clear and clean. The automatic cleaning of the burn pot is blocked. If the problem persists, contact the service centre
AUGER BLOCKED	Abnormal operation of pellet motor	Contact the service centre
COMMAND AUGER	Abnormal operation of pellet loading	Contact the service centre
MAX ELECTRICAL CURRENT	The automatic cleaning of the burn pot is blocked Burn pot dirty or clogged The door is not closed properly.	Make sure that the door is closed properly. Make sure that the burn pot is clear and clean. The automatic cleaning of the burn pot is blocked. If the problem persists, contact the service centre
CLOSE HOPPER-STOVE DOOR	Pellet hopper open Door open Air inlet clogged or dirty	Make sure that the pellet hopper, door and ash drawer are closed properly. Check the air inlet.

DISPOSAL

INFORMATION FOR MANAGEMENT OF ELECTRIC AND ELECTRONIC APPLIANCE WASTE CONTAINING BATTERIES OR ACCUMULATORS

This symbol, which is used on the product, batteries, accumulators or on the packaging or documents, means that at the end of its useful life, this product, the batteries and the accumulators included must not be collected, recycled or disposed of together with domestic waste.
Improper management of electric or electronic waste or batteries or accumulators can lead to the leakage of hazardous substances contained in the product. For the purpose of preventing damage to health or the environment, users are kindly asked to separate this equipment and/or batteries or accumulators included from other types of waste and to arrange for disposal by the municipal waste service It is possible to ask your local dealer to collect the waste electric or electronic appliance under the conditions and following the methods provided by national laws transposing the Directive 2012/19/EU.

Separate waste collection and recycling of unused electric and electronic equipment, batteries and accumulators helps to save natural resources and to guarantee that this waste is processed in a manner that is safe for health and the environment.
For more information about how to collect electric and electronic equipment and appliances, batteries and accumulators, please contact your local Council or Public Authority competent to issue the relevant permits.

EN 16510-1 Symbol	EXPLANATION
nom	Nominal heat output
part	Part load heat output
CON / INT	Appliance operation, Continuos (CON) or Intermittent (INT)
$CO_{2\,nom} / CO_{2\,part}$	Carbon dioxide emission
CO_{nom} / CO_{part}	Carbon monoxide emission
d_B	Minimum distances to combustible materials - bottom
d_C	Minimum distances to combustible materials - ceiling
d_F	Minimum distances to combustible materials - floor in front
d_L	Minimum distances to combustible materials - side radiation area
d_{non}	Minimum distances to non-combustible walls
d_{out}	Flue gas exhaust pipe
d_P	Minimum distances to adjacent combustible materials - front
d_R	Minimum distances to combustible materials - rear
d_S	Minimum distances to combustible materials - side
E, f	Power supply voltage, frequency
EEI	Energy Efficiency Index
el_{max}	Consumption of electrical auxiliary energy at nominal heat output
el_{min}	Consumption of electrical auxiliary energy at part load heat output
el_{SB}	Consumption of electrical auxiliary energy at standby
H	Appliance height
L	Appliance depth
m	Net weight
m_{chim}	Maximum load of a chimney the appliance max carry
$m_{h\,nom} / m_{h\,part}$	Hourly consumption
$NO_{x\,nom} / NO_{x\,par}$	Nitrogen oxides emission
OGC_{nom} / OCG_{part}	Emission of organic gaseous carbon
PM_{nom} / PM_{part}	Particulate matter emissions
P_{nom} / P_{part}	Heat output
p_{nom} / p_{part}	Minimum flue draught
$P_{SH\,nom} / P_{SH\,part}$	Space heat output
p_W	Permissible maximum water operating pressure
$P_{W\,nom} / P_{W\,part}$	Water heat output
s	Thickness of the protective insulation material
T_{class}	Chimney designation
$T_{f.g\,nom} / T_{f.g\,part}$	Mean flue gas temperature
$T_{s\,nom} / T_{s\,part}$	Flue gas outlet temperature
W	Appliance width
W_{max}	Maximum electric power input
η_{nom} / η_{part}	Efficiency
η_S	Seasonal space heating efficiency at nominal heat output
$\Phi_{f.g\,nom} / \Phi_{f.g\,part}$	Flue gas mass flow
Wood Pellet (L)	Wood Pellet
Wood Logs (l)	Wood Logs
	Read and follow the user operating instructions

Extraflame®

Riscaldamento a Pellet

EXTRAFLAME S.p.A. Via Dell'Artigianato, 12 36030 - MONTECCHIO PRECALCINO (VI) - ITALY
☏ +39.0445.865911 - 🖷 +39.0445.865912 - ✉ info@extraflame.it - 💻 www.lanordica-extraflame.com

MADE IN ITALY
design & production

TO FIND THE SERVICE CENTRE NEAREST TO YOU CONTACT YOUR DEALER OR CONSULT THE SITE WWW.LANORDICA-EXTRAFLAME.COM

The manufacturer reserves the right to vary the characteristics and the data reported in this pamphlet at any moment and without notice, in order to improve its products.